THERMA-TRU®

118 INDUSTRIAL DR., EDGERTON, OH 43517
TEL. (419)298-1740

CLASSIC CRAFT RUSTIC

RADIUS TOP
SINGLE "IMPACT" DOOR
INSWING / OUTSWING

EVALUATED FOR USE IN THE STATE OF TEXAS

THE THERMA-TRU FIBERGLASS DOOR DESCRIBED HEREIN COMPLIES WITH THE INTERNATIONAL RESIDENTIAL CODE (IRC), SECTIONS R301 & R613 AND THE INTERNATIONAL BUILDING CODE (IBC), SECTIONS 1714.5 1405.12, 1609, 2403 AND 2404 (INCLUDING TEXAS REVISIONS) SUBJECT TO THE FOLLOWING CONDITIONS:

1. *Anchors shall be as listed and spaced as shown in the details. Anchor embedment to base material shall be beyond wall dressing or stucco.*
2. *When used in wind borne debris regions (SEAWARD and INLAND I ZONES), the Product complies with Sections R301.2.1.2 and 1609.1.4 as an impact resistant product and does not require the use of an approved impact resistant covering. This product does not meet the requirements for enhanced protection of essential facilities as defined in ASTM E1996.*
3. *Allowable design pressure requirements must be equal to or less than the design pressure rating shown in the design pressure chart, sheet 1 of this drawing.*
4. *Conditions not covered by this drawing are subject to further engineering analysis.*

SUPPORTING DOCUMENTS & EVIDENCE

1. *Testing per TAS 201-94, TAS 202-94 and TAS 203-94 as performed by Testing Evaluation Laboratories Inc. and reported in test report number TEL 06-1031-1 Revised, dated February 14, 2007 and signed by Wendell W. Haney, P.E.*
2. *Anchor analysis for loading conditions prepared, signed and sealed by Wendell W. Haney, P.E.*
3. *Certificate of Participation issued by the National Accreditation and Management Institute, Inc., certifying that Therma-Tru Corporation. is manufacturing products within a Quality Assurance program.*

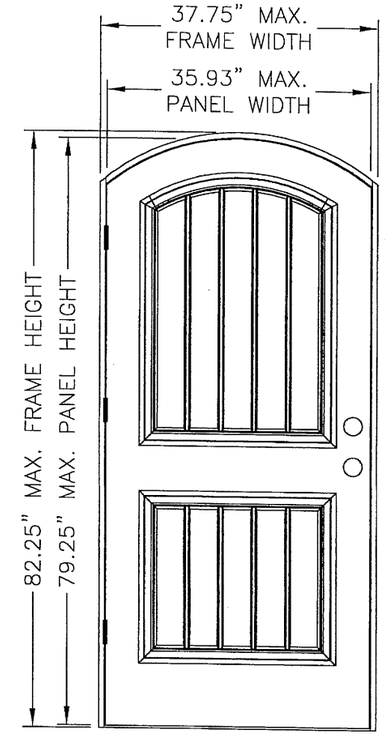

"CLASSIC CRAFT RUSTIC"

TABLE OF CONTENTS

SHEET #	DESCRIPTION
1	TYPICAL ELEVATION, DESIGN PRESSURES & GENERAL NOTES
2	DOOR PANEL DETAILS (CLASSIC CRAFT RUSTIC)
3	HORIZONTAL CROSS SECTIONS
4	VERTICAL CROSS SECTIONS
5	FRAME ANCHORING
6	BILL OF MATERIALS & COMPONENTS

DOOR TYPE	SWING	OVERALL FRAME DIMENSION	DESIGN PRESSURE	
			POSITIVE	NEGATIVE
CLASSIC CRAFT RUSTIC	OUTSWING	37.75" X 80.75"	+90.0	-95.0
	INSWING	37.75" X 82.25"	+90.0	-95.0

Documents Prepared By:
RW BUILDING CONSULTANTS, INC.
P.O. Box 230 Valrico FL. 33595
Phone No.: 813.659.9197
Florida Board of Professional Engineers
Certificate Of Authorization No. 9813
Wendell W. Haney, P.E. No. 54158
2-14-07

PRODUCT: SINGLE OPAQUE FIBERGLASS DOOR "IMPACT" INSWING / OUTSWING

PART OR ASSEMBLY: TYPICAL ELEVATION, DESIGN PRESSURES & GENERAL NOTES

NO.	DATE	REVISIONS	BY

DATE: 12/15/06
SCALE: N.T.S.
DWG. BY: AEM
CHK. BY: WWH
DRAWING NO.: TX-3165
SHEET 1 OF 6

© 2006 R.W. BUILDING CONSULTANTS INC.

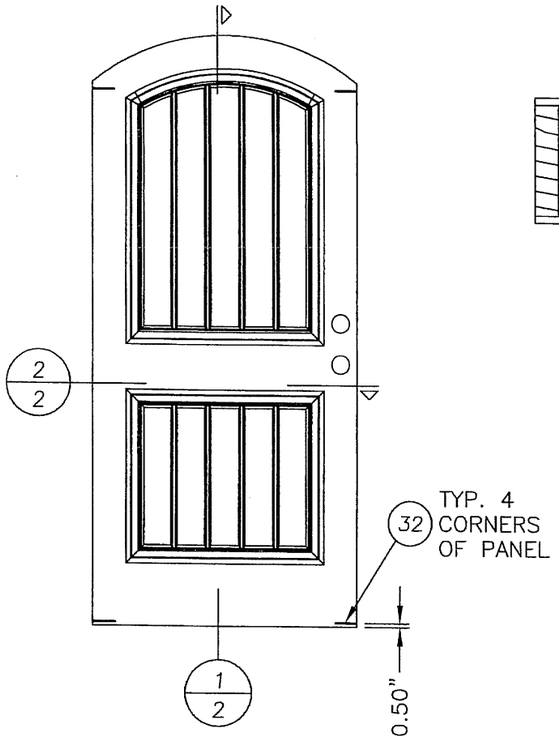

CLASSIC CRAFT RUSTIC

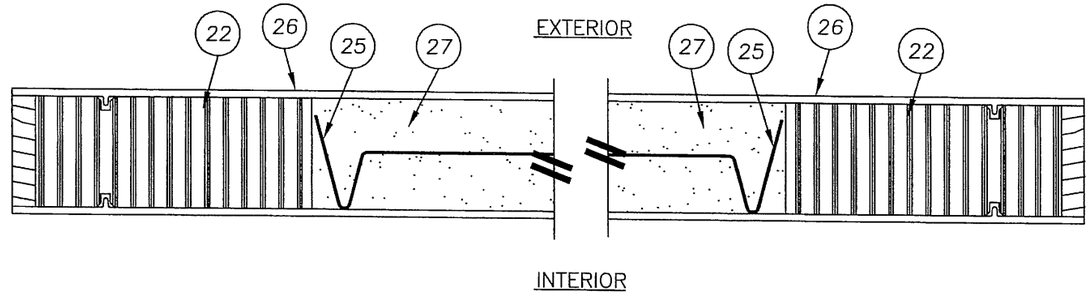

2/2 HORIZONTAL CROSS SECTION (CLASSIC CRAFT RUSTIC)

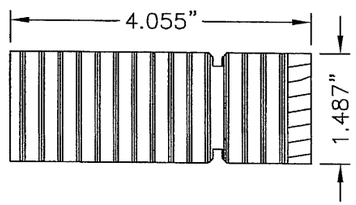

22 LOCK & HINGE STILE CLASSIC CRAFT RUSTIC

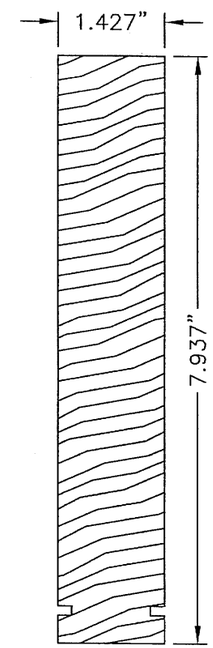

23 TOP RAIL CLASSIC CRAFT RUSTIC

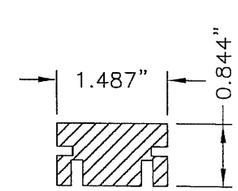

24 BOTTOM RAIL CLASSIC CRAFT RUSTIC

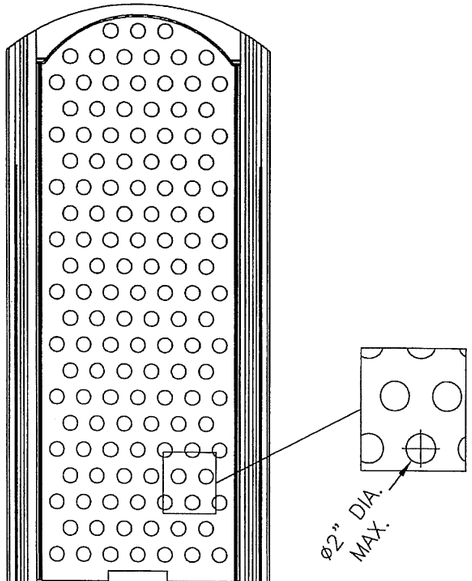

28.86% OPEN
AREA MAX.

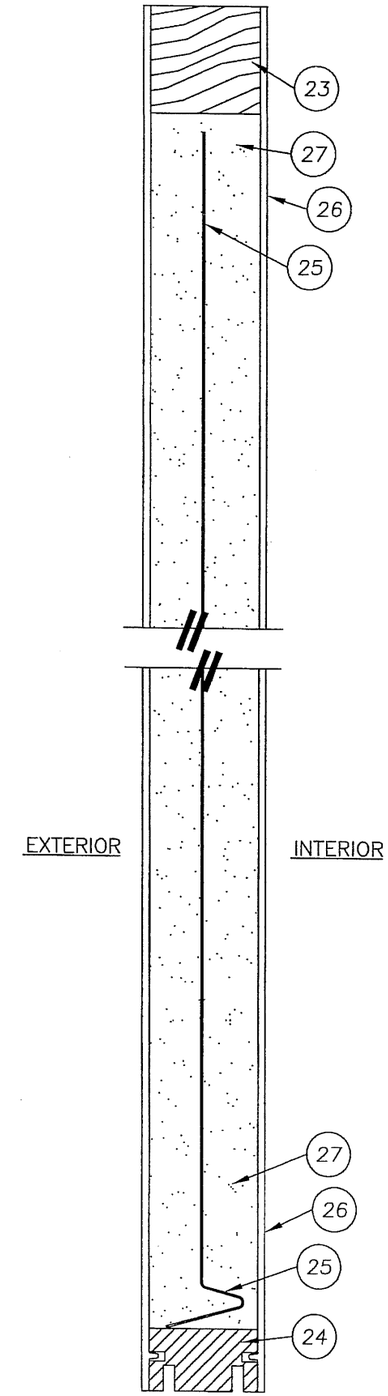

1/2 VERTICAL CROSS SECTION (CLASSIC CRAFT RUSTIC)

Documents Prepared By:
R.W. BUILDING CONSULTANTS, INC.
P.O. Box 230 Valrico FL. 33595
Phone No.: 813.659.9197
Florida Board of Professional Engineers
Certificate Of Authorization No. 9813
Wendell W. Hoag, P.E. No. 54158
2-14-07

PRODUCT:
SINGLE OPAQUE
FIBERGLASS DOOR
"IMPACT" INSWING / OUTSWING

PART OR ASSEMBLY:
DOOR PANEL DETAILS
(CLASSIC CRAFT RUSTIC)

NO.	DATE	REVISIONS	BY

DATE: 12/15/06
SCALE: N.T.S.
DWG. BY: AEM
CHK. BY: WWH
DRAWING NO.: TX-3165
SHEET 2 OF 6

© 2006 R.W. BUILDING CONSULTANTS INC.

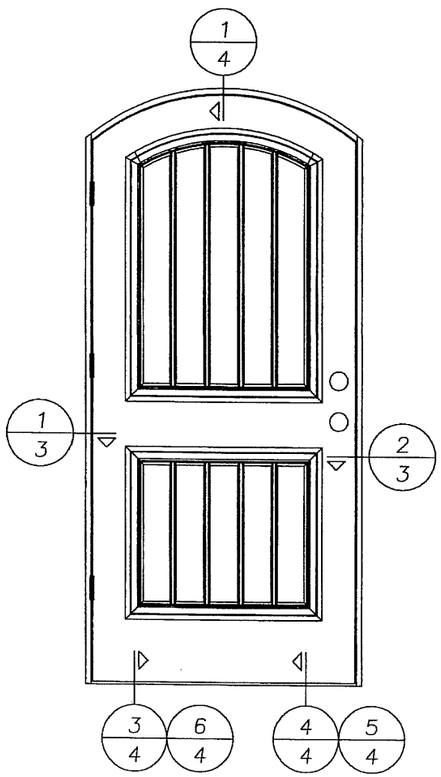

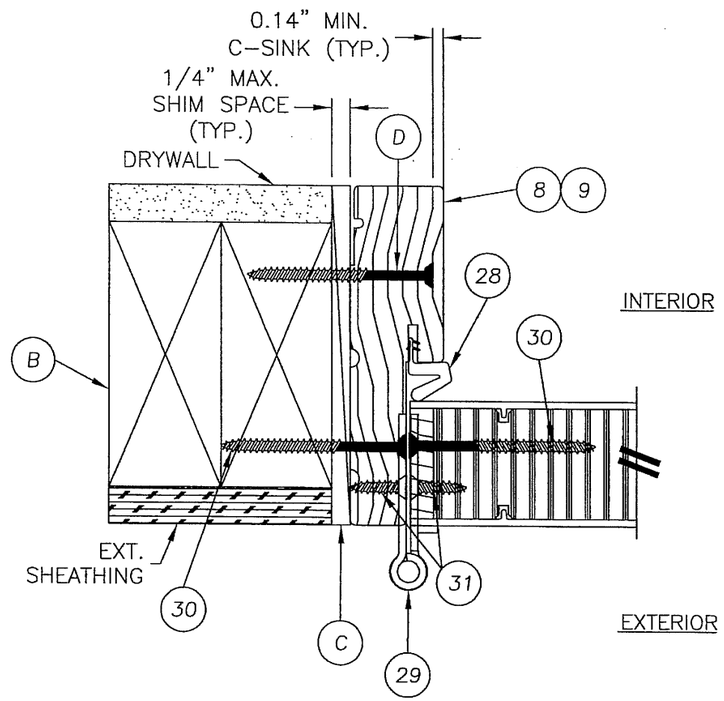

1/3 HORIZONTAL CROSS SECTION @ HINGE

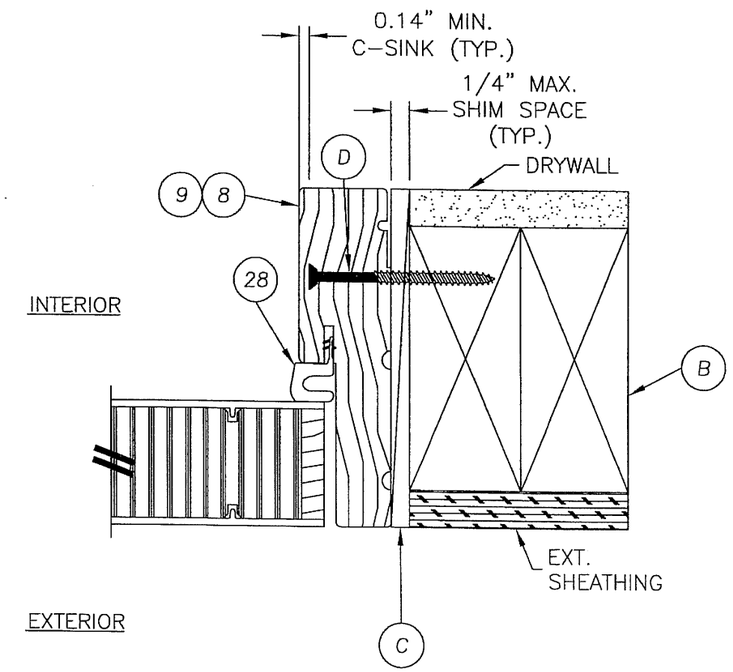

2/3 HORIZONTAL CROSS SECTION @ LATCH

Documents Prepared By:
R.W. BUILDING CONSULTANTS, INC.
P.O. Box 230 Valrico FL. 33595
Phone No.: 813.659.9197
Florida Board of Professional Engineers
Certificate Of Authorization No. 9813
Wendell W. Honey, P.E. No. 54158
2-14-07

PRODUCT:
SINGLE OPAQUE FIBERGLASS DOOR "IMPACT" INSWING / OUTSWING

PART OR ASSEMBLY:
HORIZONTAL CROSS SECTIONS

NO.	DATE	REVISIONS	BY

DATE: 12/15/06
SCALE: N.T.S.
DWG. BY: AEM
CHK. BY: WWH
DRAWING NO.: TX-3165
SHEET 3 OF 6

© 2006 R.W. BUILDING CONSULTANTS INC.

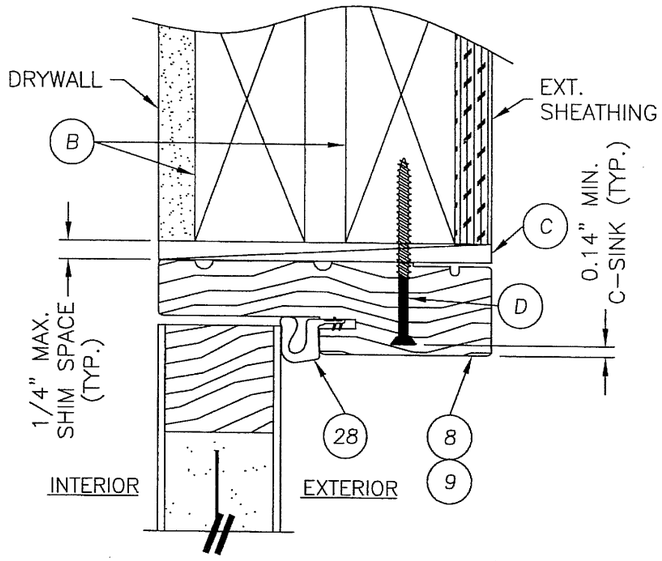

1/4 VERTICAL CROSS SECTION @ HEAD

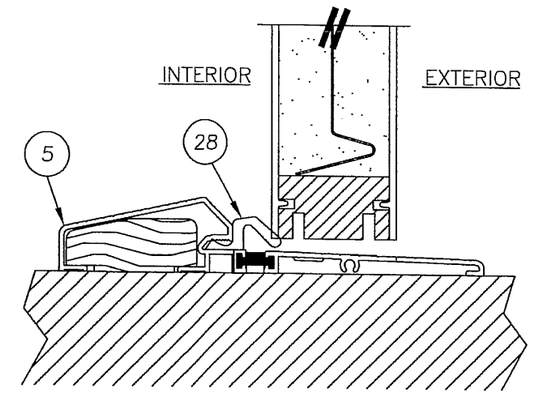

3/4 VERTICAL CROSS SECTION @ THRESHOLD

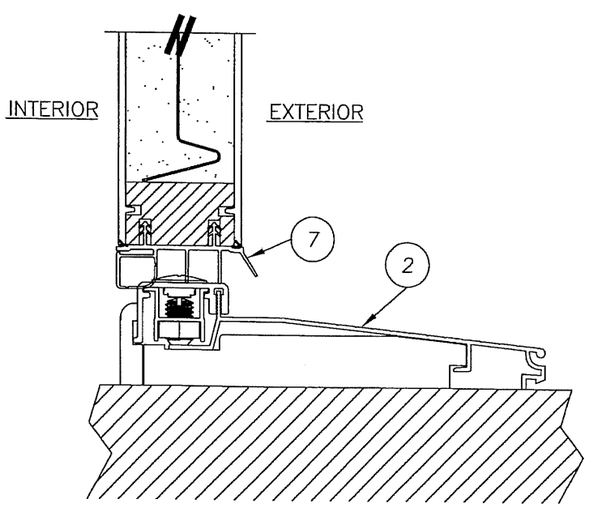

4/4 VERTICAL CROSS SECTION @ THRESHOLD

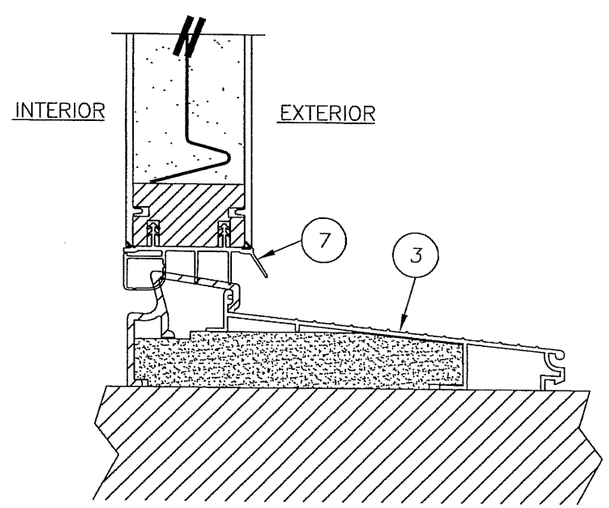

5/4 VERTICAL CROSS SECTION @ THRESHOLD

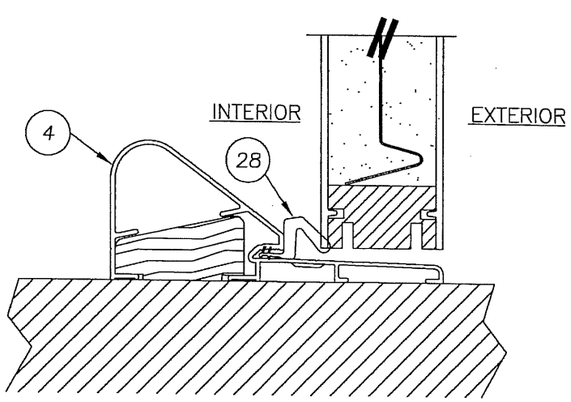

6/4 VERTICAL CROSS SECTION @ THRESHOLD

Documents Prepared By:
R.W. BUILDING CONSULTANTS, INC.
P.O. Box 230 Valrico FL. 33595
Phone No.: 813.659.9197
Florida Board of Professional Engineers
Certificate Of Authorization No. 9813
Wendell W. Harley, P.E. No. 54158
2-14-07

PRODUCT: SINGLE OPAQUE FIBERGLASS DOOR "IMPACT" INSWING / OUTSWING

PART OR ASSEMBLY: VERTICAL CROSS SECTIONS

NO.	DATE	REVISIONS	BY

DATE: 12/15/06
SCALE: N.T.S.
DWG. BY: AEM
CHK. BY: WWH
DRAWING NO.: TX-3165
SHEET 4 OF 6

© 2006 R.W. BUILDING CONSULTANTS INC.

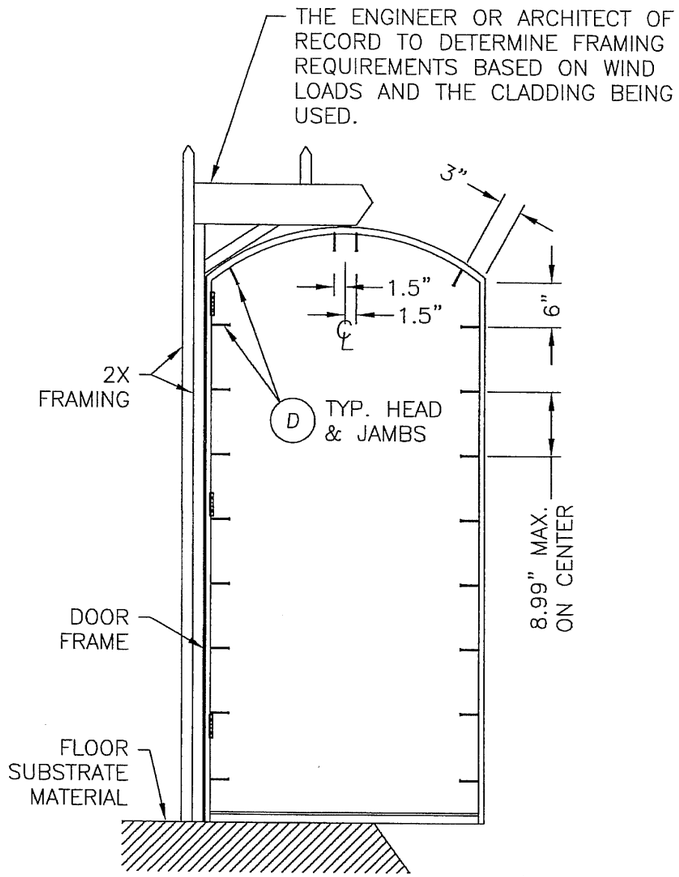

FRAME ANCHORING

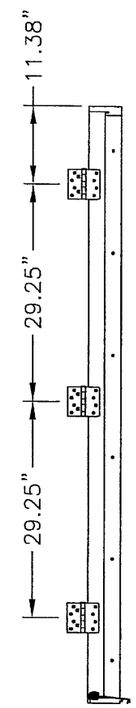

HINGE DETAIL

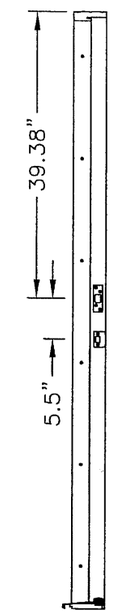

STRIKE PLATE DETAIL

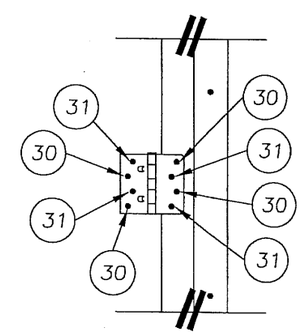

HINGE DETAIL

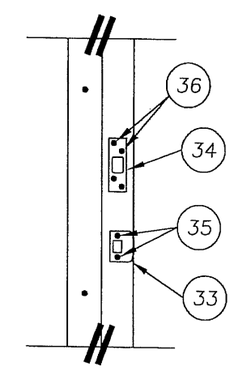

STRIKE PLATE DETAIL

Documents Prepared By:
RW BUILDING CONSULTANTS, INC.
P.O. Box 230 Valrico FL. 33595
Phone No.: 813.659.9197
Florida Board of Professional Engineers
Certificate Of Authorization No. 9813
Wendell W. Haney, P.E. No. 54158

PRODUCT: SINGLE OPAQUE FIBERGLASS DOOR "IMPACT" INSWING / OUTSWING

PART OR ASSEMBLY: FRAME ANCHORING

NO.	DATE	BY

REVISIONS

DATE: 12/15/06
SCALE: N.T.S.
DWG. BY: AEM
CHK. BY: WWH
DRAWING NO.: TX-3165
SHEET 5 OF 6

© 2006 R.W. BUILDING CONSULTANTS INC.

BILL OF MATERIALS		
ITEM	DESCRIPTION	MATERIAL
B	2X FRAMING	WOOD
C	1/4" MAX. SHIM SPACE	WOOD
D	#10 X 2-1/2" PFH WOOD SCREW	STEEL
G	KWIKSET 200 SERIES PASSAGE LOCK	STEEL
H	KWIKSET 600 SERIES DEADBOLT	STEEL
1	INSWING ADJUSTABLE THRESHOLD (IS300AJ)	ALUM./WOOD
2	INSWING THRESHOLD (IS300HP5)	–
3	INSWING SELF ADJUST THERMAL BREAK THRESHOLD (ISP30M)	ALUM./COMP.
4	OUTSWING COASTAL THRESHOLD	ALUM./WOOD
5	OUTSWING STANDARD THRESHOLD	ALUM./WOOD
6	INSWING THRESHOLD	–
7	DOOR BOTTOM SWEEP	VINYL
8	JAMB (PINE)	WOOD
9	JAMB (OAK)	WOOD
22	LOCK & HINGE STILE (CLASSIC CRAFT RUSTIC)	WOOD/LVL
23	TOP RAIL (CLASSIC CRAFT RUSTIC)	WOOD
24	BOTTOM RAIL (CLASSIC CRAFT RUSTIC)	PVC
25	PANEL REINFORCEMENT 0.023" THK. (CLASSIC CRAFT RUSTIC)	STEEL
26	DOOR SKIN 0.090" THK. (CC RUSTIC) Fy = 6,000 PSI MIN.	FIBERGLASS
27	FOAM CORE	POLYURETHANE
28	WEATHERSTRIP	FOAM
29	HINGE	STEEL
30	#10 X 2-1/2" PFH SCREW	STEEL
31	#10 X 3/4" PFH SCREW	STEEL
32	#9 X 3" PFH WOOD SCREW	STEEL
33	LATCH STRIKE PLATE	STEEL
34	SECURITY STRIKE PLATE (SINGLE DOOR ONLY)	STEEL
35	#8 X 3" PFH SCREW	STEEL
36	#8 X 3" PFH SCREW	STEEL
37	DEADBOLT STRIKE PLATE	STEEL
52	DOOR BOTTOM SWEEP	VINYL

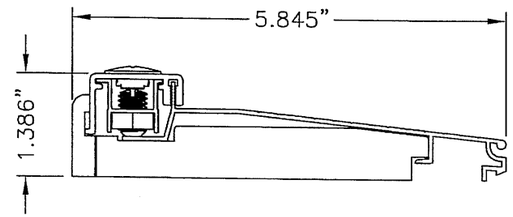

2 THRESHOLD
INSWING ADJUSTABLE

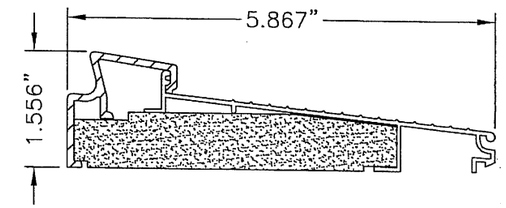

3 THRESHOLD
INSWING SELF-ADJUST

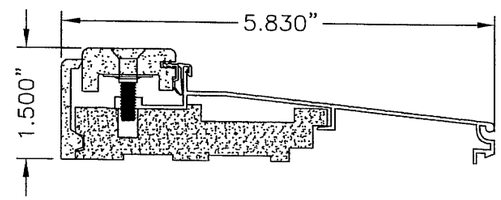

6 THRESHOLD
INSWING
MAX. DP RATING = +/- 50.0 PSF

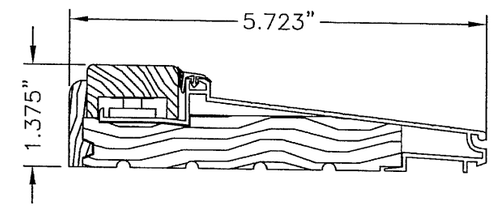

1 THRESHOLD
INSWING ADJUSTABLE

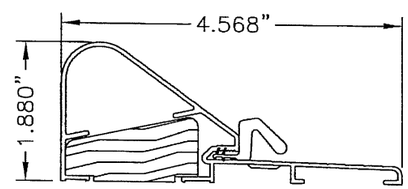

4 THRESHOLD
OUTSWING COASTAL

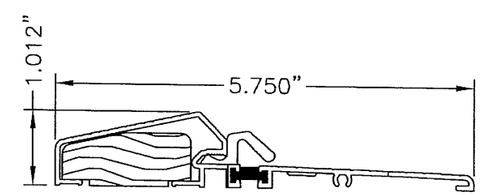

5 THRESHOLD
OUTSWING STANDARD

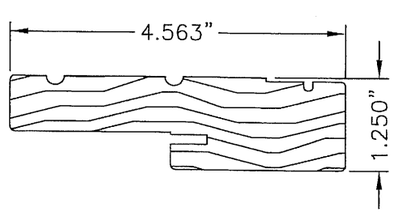

9 8 JAMB

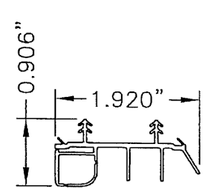

7 SWEEP

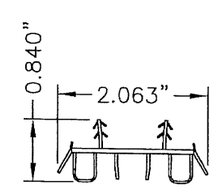

52 SWEEP

Documents Prepared By:
RW BUILDING CONSULTANTS, INC.
P.O. Box 230 Valrico FL. 33595
Phone No.: 813.659.9197
Florida Board of Professional Engineers
Certificate Of Authorization No. 9813
Wendell W. Hanes, P.E. No. 54158
2-14-07

PRODUCT: SINGLE OPAQUE FIBERGLASS DOOR "IMPACT" INSWING / OUTSWING
PART OR ASSEMBLY: BILL OF MATERIALS & COMPONENTS

NO.	DATE	REVISIONS	BY

DATE: 12/15/06
SCALE: N.T.S.
DWG. BY: AEM
CHK. BY: WWH
DRAWING NO.: TX-3165
SHEET 6 OF 6

© 2006 R.W. BUILDING CONSULTANTS INC.

THERMA TRU®

118 INDUSTRIAL DR., EDGERTON, OH 43517
TEL. (419)298-1740

SMOOTH STAR, FIBER CLASSIC, CLASSIC CRAFT & CLASSIC CRAFT RUSTIC
SINGLE "IMPACT" DOOR
INSWING / OUTSWING

EVALUATED FOR USE IN THE STATE OF TEXAS

THE THERMA–TRU FIBERGLASS DOOR DESCRIBED HEREIN COMPLIES WITH THE INTERNATIONAL RESIDENTIAL CODE (IRC), SECTIONS R301 & R613 AND THE INTERNATIONAL BUILDING CODE (IBC), SECTIONS 1714.5 1405.12, 1609, 2403 AND 2404 (INCLUDING TEXAS REVISIONS) SUBJECT TO THE FOLLOWING CONDITIONS:

1. Anchors shall be as listed and spaced as shown in the details. Anchor embedment to base material shall be beyond wall dressing or stucco.
2. When used in wind borne debris regions (SEAWARD and INLAND I ZONES), the Product complies with Sections R301.2.1.2 and 1609.1.4 as an impact resistant product and does not require the use of an approved impact resistant covering. This product does not meet the requirements for enhanced protection of essential facilities as defined in ASTM E1996.
3. Allowable design pressure requirements must be equal to or less than the design pressure rating shown in the design pressure chart, sheet 1 of this drawing.
4. Conditions not covered by this drawing are subject to further engineering analysis.

SUPPORTING DOCUMENTS & EVIDENCE

1. Testing per TAS 201–94, TAS 202–94 and TAS 203–94 as performed by Testing Evaluation Laboratories Inc. and reported in test report number TEL 06–1031–1 Revised, dated February 14, 2007 and signed by Wendell W. Haney, P.E.
2. Anchor analysis for loading conditions prepared, signed and sealed by Wendell W. Haney, P.E.
3. Certificate of Participation issued by the National Accreditation and Management Institute, Inc., certifying that Therma–Tru Corporation. is manufacturing products within a Quality Assurance program.

TABLE OF CONTENTS

SHEET #	DESCRIPTION
1	TYPICAL ELEVATION, DESIGN PRESSURES & GENERAL NOTES
2	DOOR PANEL DETAILS (SMOOTH STAR)
3	DOOR PANEL DETAILS (CLASSIC CRAFT)
4	DOOR PANEL DETAILS (CLASSIC CRAFT RUSTIC)
5	DOOR PANEL DETAILS (FIBER CLASSIC)
6	HORIZONTAL CROSS SECTIONS
7	VERTICAL CROSS SECTIONS
8	FRAME ANCHORING
9	BILL OF MATERIALS & COMPONENTS

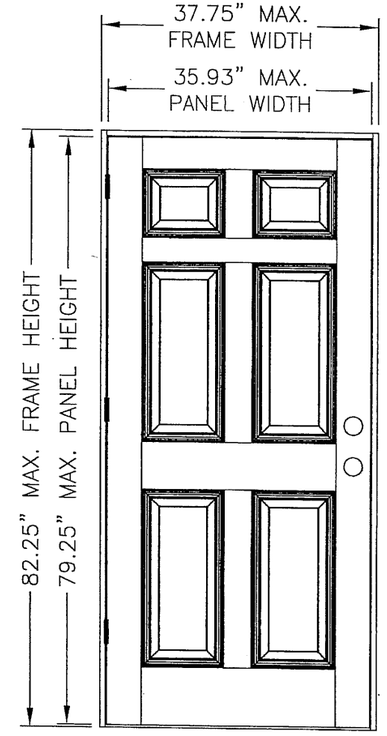

"SMOOTH STAR", "CLASSIC CRAFT", "CLASSIC CRAFT RUSTIC" & "FIBER CLASSIC"

DOOR TYPE	SWING	OVERALL FRAME DIMENSION	DESIGN PRESSURE	
			POSITIVE	NEGATIVE
CLASSIC CRAFT	OUTSWING	37.75" X 80.75"	+100.0	–100.0
	INSWING	37.75" X 82.25"	+100.0	–100.0
FIBER CLASSIC	OUTSWING	37.75" X 80.75"	+80.0	–80.0
	INSWING	37.75" X 82.25"	+75.0	–75.0
SMOOTH STAR	OUTSWING	37.75" X 80.75"	+80.0	–80.0
	INSWING	37.75" X 82.25"	+75.0	–75.0
RUSTIC	OUTSWING	37.75" X 80.75"	+90.0	–90.0
	INSWING	37.75" X 82.25"	+90.0	–90.0

Documents Prepared By:
R.W. BUILDING CONSULTANTS, INC.
P.O. Box 230 Valrico FL. 33595
Phone No.: 813.659.9197
Florida Board of Professional Engineers
Certificate Of Authorization No. 9813
Wendell W. Haney, P.E. No. 54158
2-14-07

PRODUCT:
SINGLE OPAQUE FIBERGLASS DOOR "IMPACT" INSWING / OUTSWING

PART OR ASSEMBLY:
TYPICAL ELEVATION, DESIGN PRESSURES & GENERAL NOTES

REVISIONS

NO.	DATE	BY

DATE: 12/15/06
SCALE: N.T.S.
DWG. BY: AEM
CHK. BY: WWH
DRAWING NO.: TX–3166
SHEET 1 OF 9

© 2006 R.W. BUILDING CONSULTANTS INC.

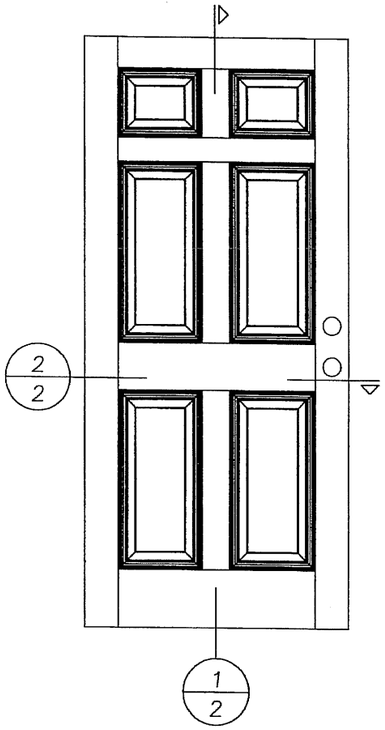

SMOOTH STAR

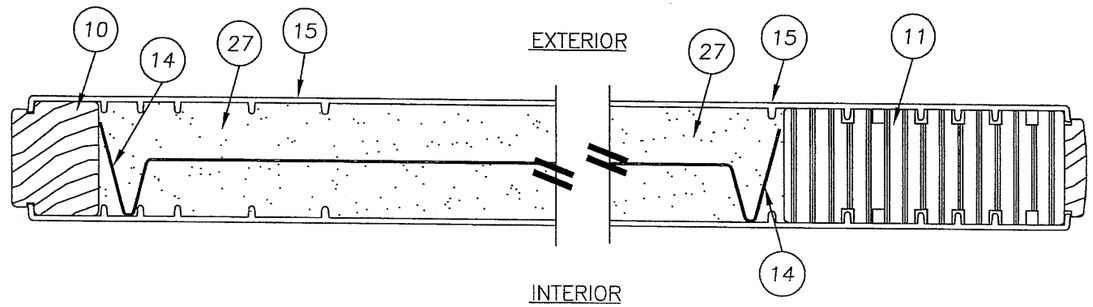

2/2 HORIZONTAL CROSS SECTION
SMOOTH STAR

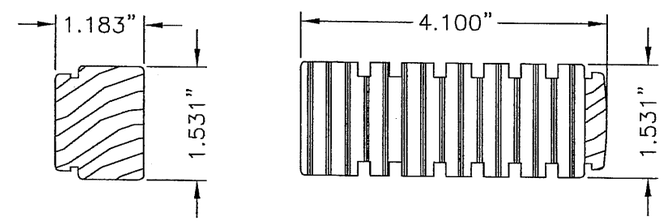

10 HINGE STILE
SMOOTH STAR

11 LOCK STILE
SMOOTH STAR

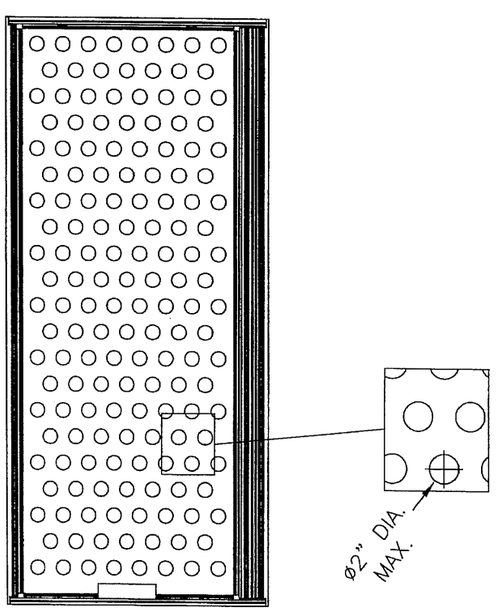

28.86% OPEN
AREA MAX.

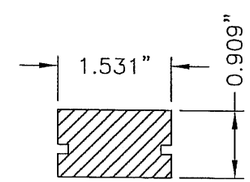

12 TOP RAIL
SMOOTH STAR

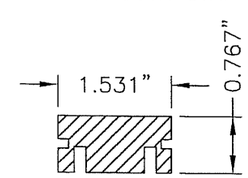

13 BOTTOM RAIL
SMOOTH STAR

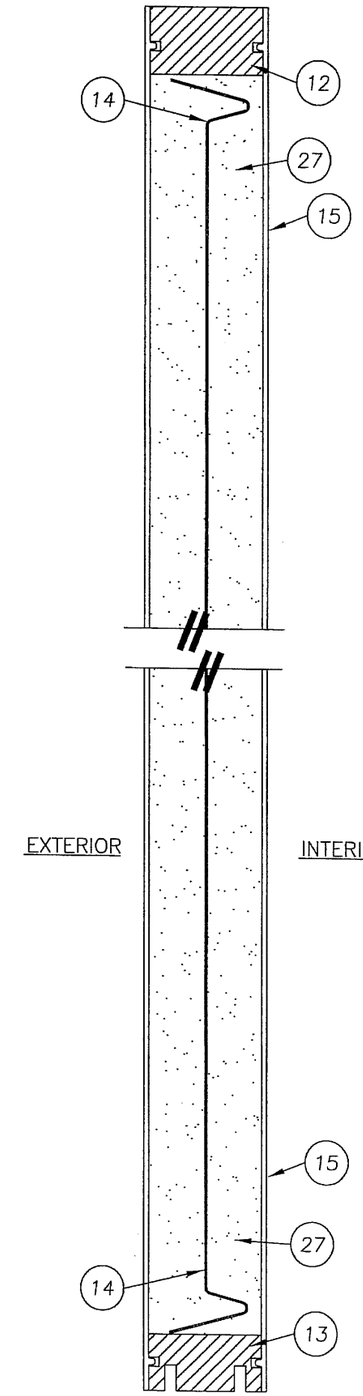

1/2 VERTICAL CROSS SECTION
SMOOTH STAR

Documents Prepared By:
RW BUILDING CONSULTANTS, INC.
P.O. Box 230 Valrico FL. 33595
Phone No.: 813.659.9197
Florida Board of Professional Engineers
Certificate Of Authorization No. 9813
Wendell W. Honey, P.E. No. 54158
2-14-07

PRODUCT: SINGLE OPAQUE FIBERGLASS DOOR "IMPACT" INSWING / OUTSWING

PART OR ASSEMBLY: DOOR PANEL DETAILS (SMOOTH STAR)

NO.	DATE	REVISIONS	BY

DATE: 12/15/06
SCALE: N.T.S.
DWG. BY: AEM
CHK. BY: WWH
DRAWING NO.: TX-3166
SHEET 2 OF 9

© 2006 R.W. BUILDING CONSULTANTS INC.

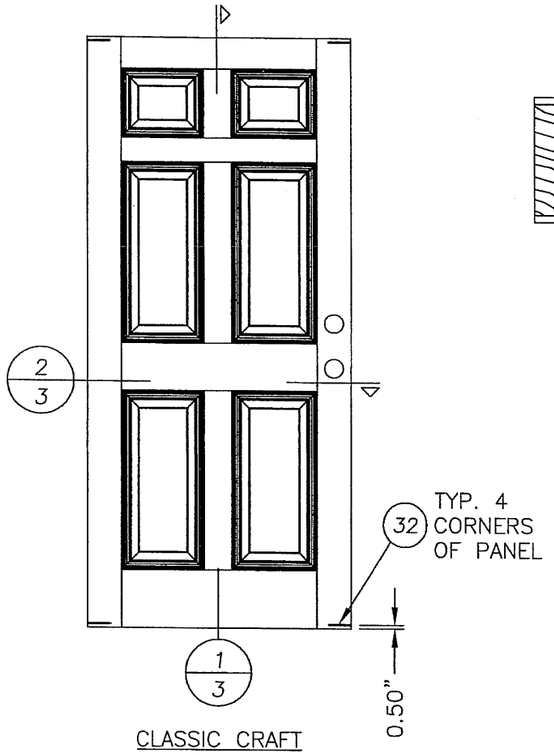

CLASSIC CRAFT

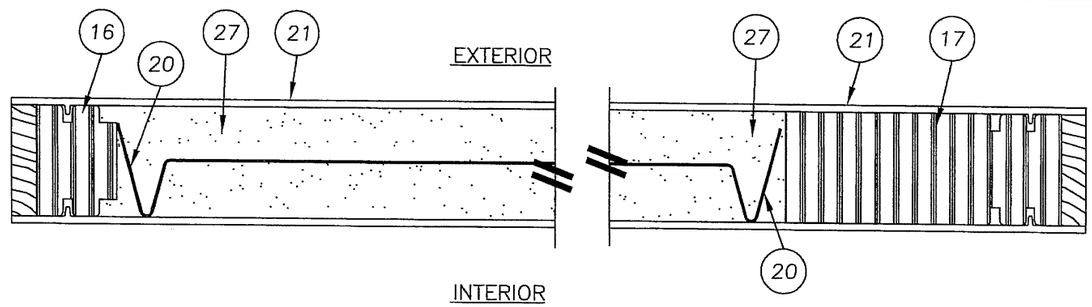

2/3 HORIZONTAL CROSS SECTION (CLASSIC CRAFT)

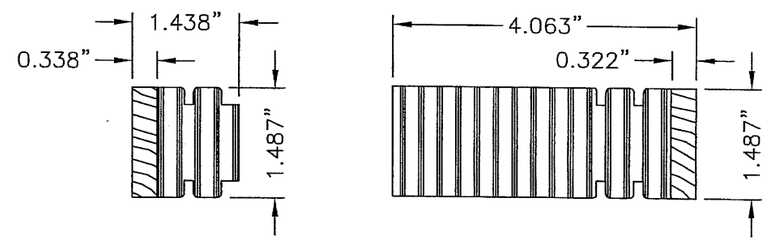

16 HINGE STILE CLASSIC CRAFT

17 LOCK STILE CLASSIC CRAFT

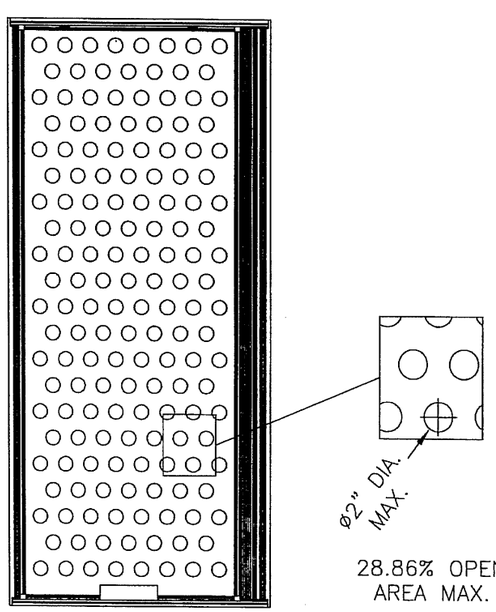

28.86% OPEN AREA MAX.

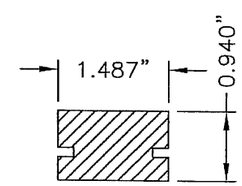

18 TOP RAIL CLASSIC CRAFT

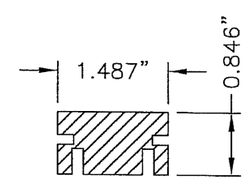

19 BOTTOM RAIL CLASSIC CRAFT

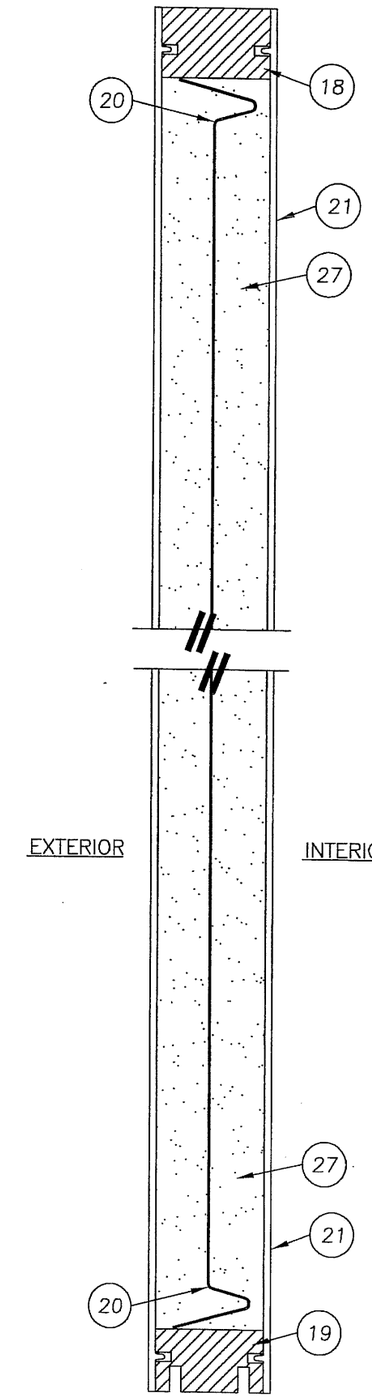

1/3 VERTICAL CROSS SECTION (CLASSIC CRAFT)

Documents Prepared By:
RW BUILDING CONSULTANTS, INC.
P.O. Box 230 Valrico FL. 33595
Phone No.: 813.659.9197
Florida Board of Professional Engineers
Certificate Of Authorization No. 9813
Wendell W. Hafney, P.E. No. 54158
2-14-07

PRODUCT: SINGLE OPAQUE FIBERGLASS DOOR "IMPACT" INSWING / OUTSWING

PART OR ASSEMBLY: DOOR PANEL DETAILS (CLASSIC CRAFT)

NO.	DATE	REVISIONS	BY

DATE: 12/15/06
SCALE: N.T.S.
DWG. BY: AEM
CHK. BY: WWH
DRAWING NO.: TX-3166
SHEET 3 OF 9

© 2006 R.W. BUILDING CONSULTANTS INC.

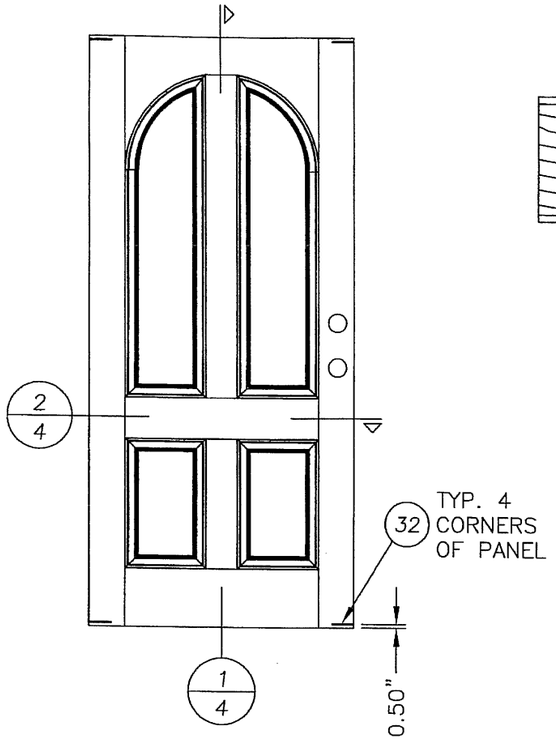

CLASSIC CRAFT RUSTIC

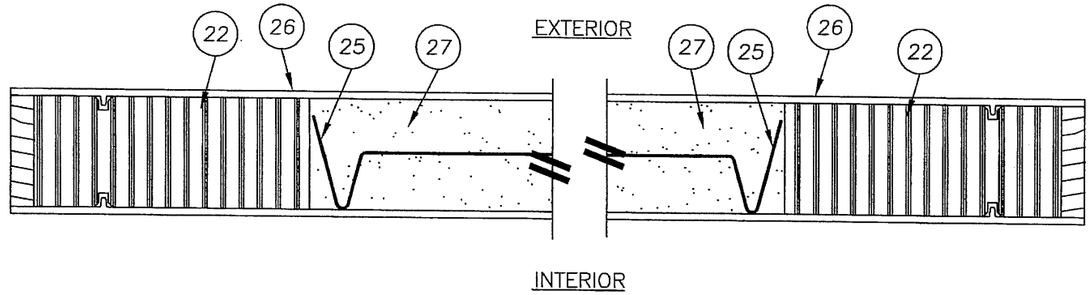

2/4 HORIZONTAL CROSS SECTION (CLASSIC CRAFT RUSTIC)

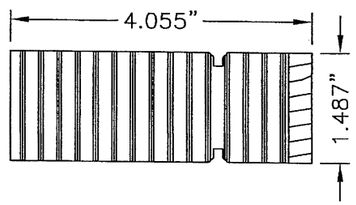

22 LOCK & HINGE STILE
CLASSIC CRAFT RUSTIC

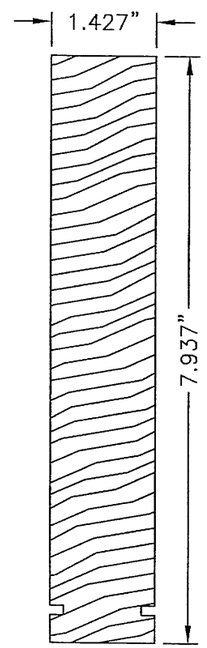

23 TOP RAIL
CLASSIC CRAFT RUSTIC

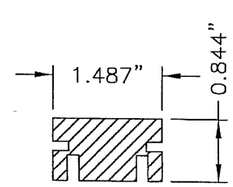

24 BOTTOM RAIL
CLASSIC CRAFT RUSTIC

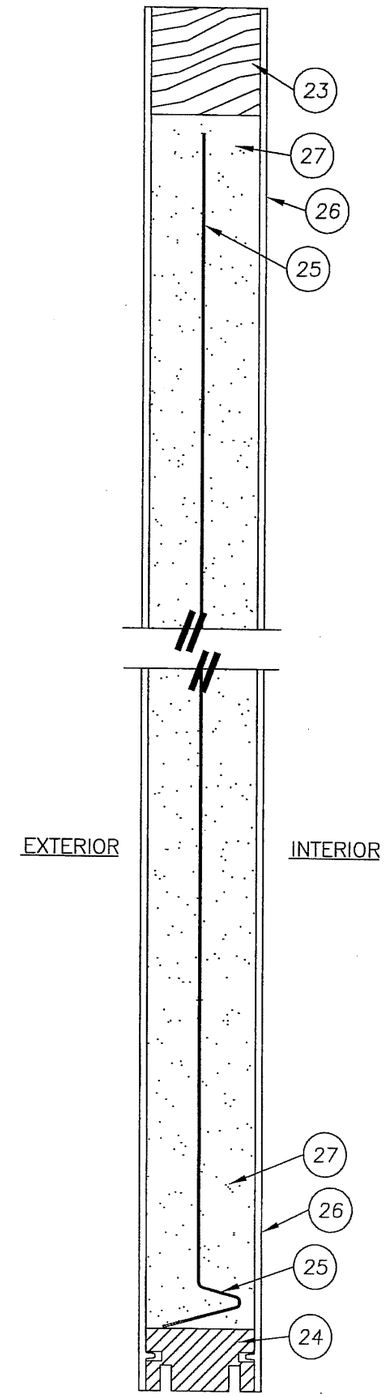

1/4 VERTICAL CROSS SECTION (CLASSIC CRAFT RUSTIC)

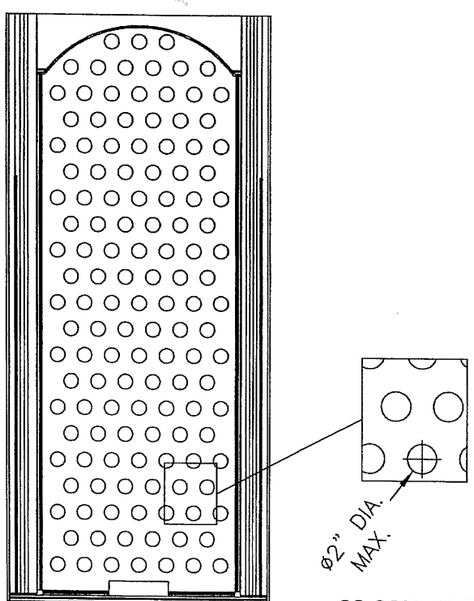

28.86% OPEN AREA MAX.

Documents Prepared By:
R W BUILDING CONSULTANTS, INC.
P.O. Box 230 Valrico FL. 33595
Phone No.: 813.659.9197
Florida Board of Professional Engineers
Certificate Of Authorization No. 9813
Wendell W. Hunter, P.E. No. 54158
2-14-07

PRODUCT: SINGLE OPAQUE FIBERGLASS DOOR "IMPACT" INSWING / OUTSWING

PART OR ASSEMBLY: DOOR PANEL DETAILS (CLASSIC CRAFT RUSTIC)

NO.	DATE	REVISIONS	BY

DATE: 12/15/06
SCALE: N.T.S.
DWG. BY: AEM
CHK. BY: WWH
DRAWING NO.: TX-3166
SHEET 4 OF 9

© 2006 R.W. BUILDING CONSULTANTS INC.

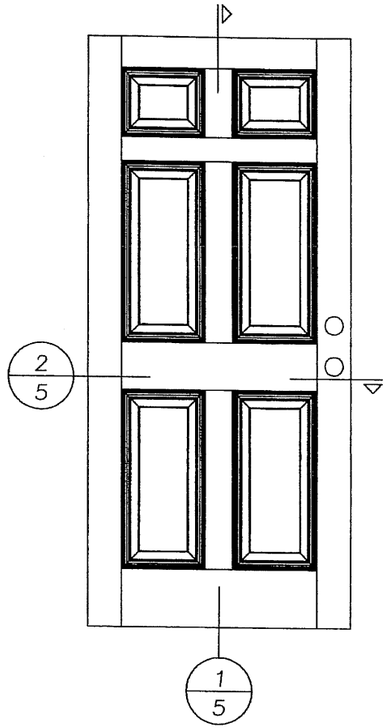

FIBER CLASSIC

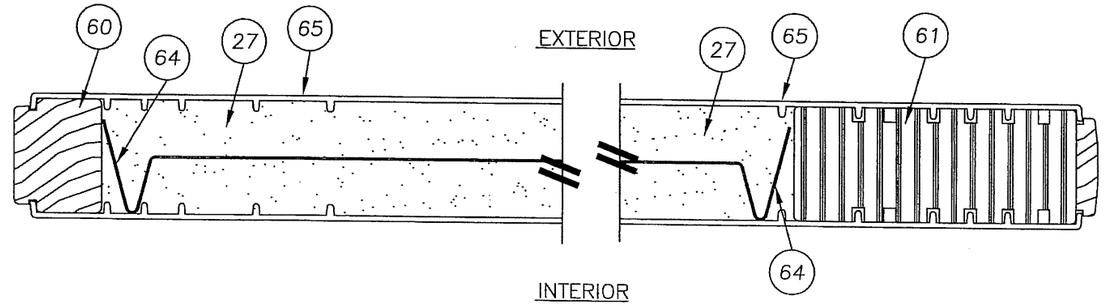

2/5 HORIZONTAL CROSS SECTION
FIBER CLASSIC

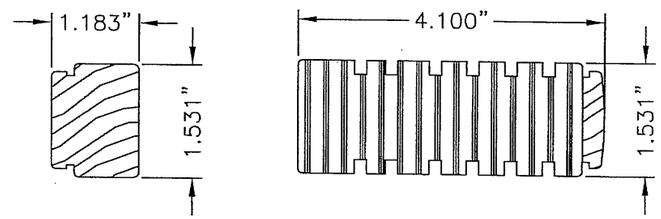

60 HINGE STILE
FIBER CLASSIC

61 LOCK STILE
FIBER CLASSIC

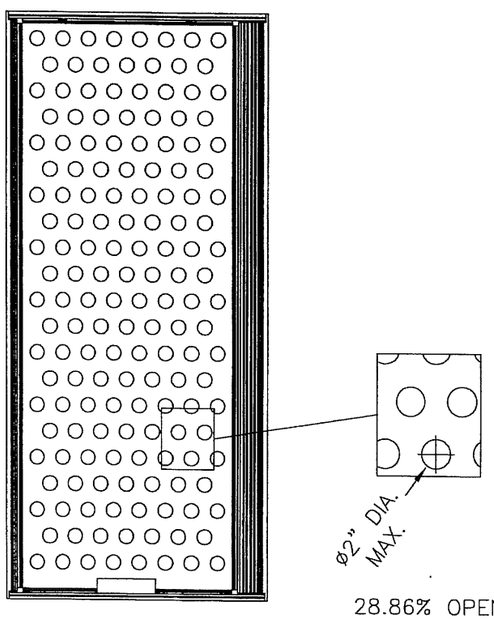

28.86% OPEN
AREA MAX.

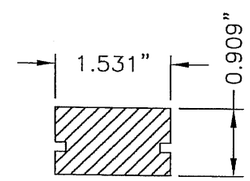

62 TOP RAIL
FIBER CLASSIC

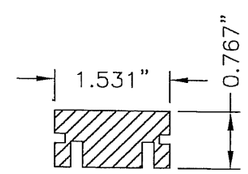

63 BOTTOM RAIL
FIBER CLASSIC

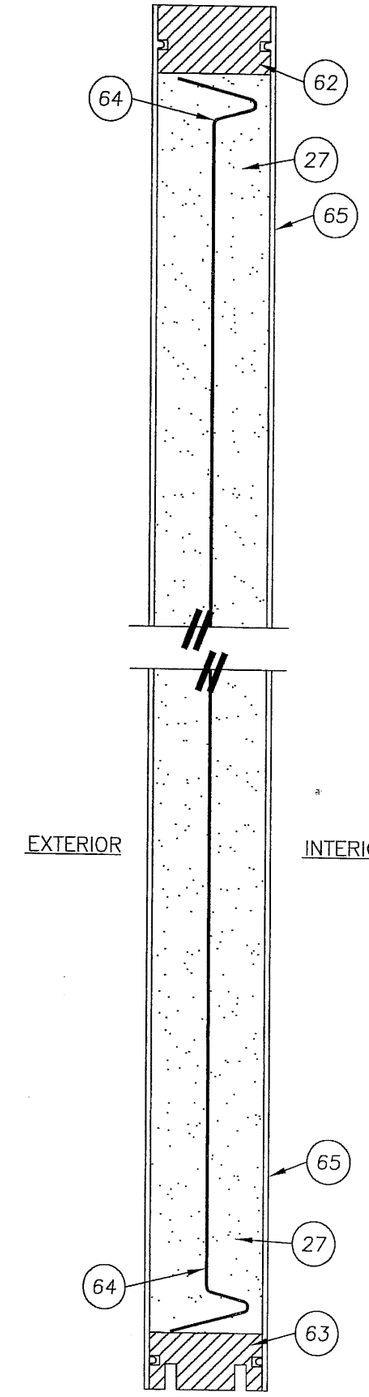

1/5 VERTICAL CROSS SECTION
FIBER CLASSIC

Documents Prepared By:
RW BUILDING CONSULTANTS, INC.
P.O. Box 230 Valrico FL. 33595
Phone No.: 813.659.9197
Florida Board of Professional Engineers
Certificate Of Authorization No. 9813
Wendell W. Hopey, P.E. No. 54158
2-14-07

PRODUCT: SINGLE OPAQUE FIBERGLASS DOOR "IMPACT" INSWING / OUTSWING
PART OR ASSEMBLY: DOOR PANEL DETAILS (FIBER CLASSIC)

NO.	DATE	BY

REVISIONS

DATE: 12/15/06
SCALE: N.T.S.
DWG. BY: AEM
CHK. BY: WWH
DRAWING NO.: TX-3166
SHEET 5 OF 9

© 2006 R.W. BUILDING CONSULTANTS INC.

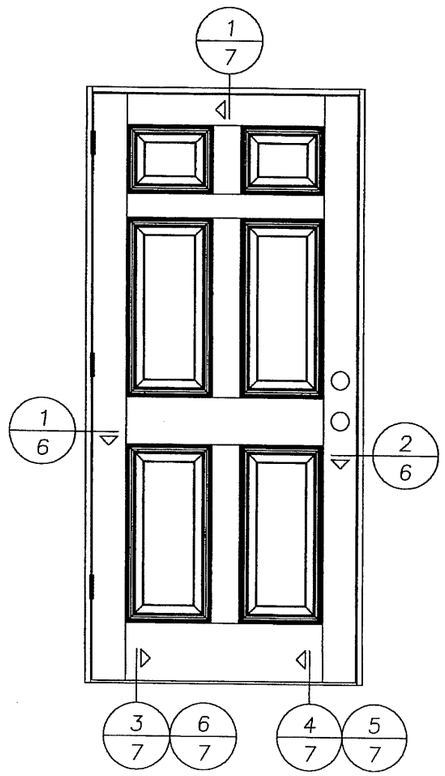

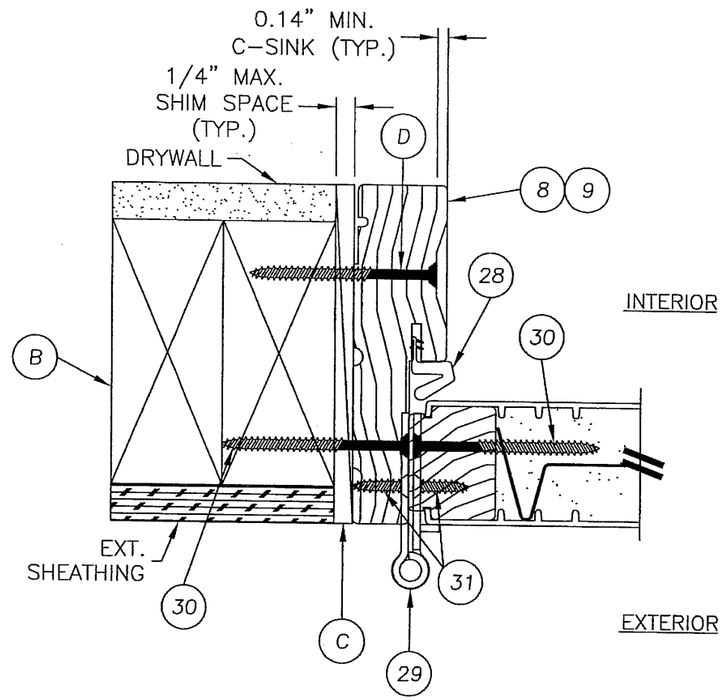

1/6 HORIZONTAL CROSS SECTION
@ HINGE
SMOOTH STAR PANEL SHOWN
SEE DOOR PANEL DETAILS FOR
OPTIONAL PANEL TYPES

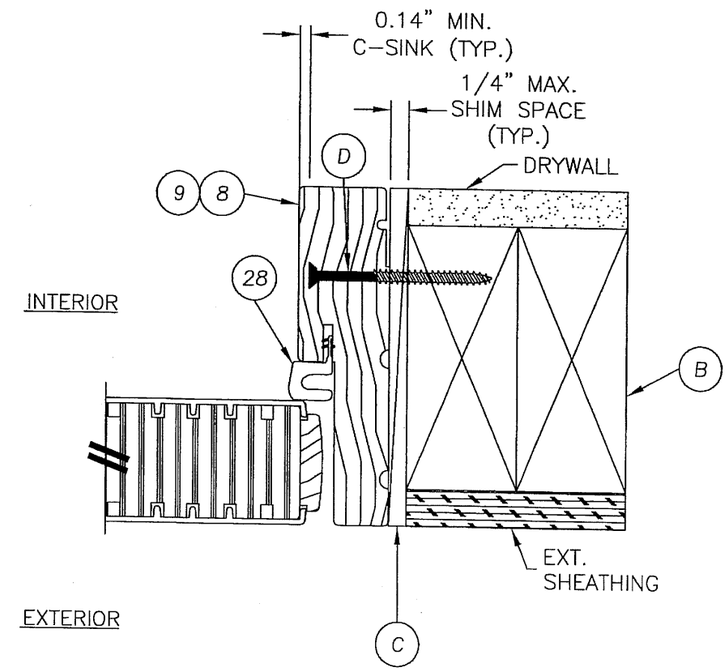

2/6 HORIZONTAL CROSS SECTION
@ LATCH
SMOOTH STAR PANEL SHOWN
SEE DOOR PANEL DETAILS FOR
OPTIONAL PANEL TYPES

Documents Prepared By:
RW BUILDING CONSULTANTS, INC.
P.O. Box 230 Valrico FL. 33595
Phone No.: 813.659.9197
Florida Board of Professional Engineers
Certificate Of Authorization No. 9813
Wendell W. Haney, P.E. No. 54158
2-14-07

PRODUCT:
SINGLE OPAQUE
FIBERGLASS DOOR
"IMPACT" INSWING / OUTSWING

PART OR ASSEMBLY:
HORIZONTAL CROSS SECTIONS

NO.	DATE	REVISIONS	BY

DATE: 12/15/06
SCALE: N.T.S.
DWG. BY: AEM
CHK. BY: WWH
DRAWING NO.: TX-3166
SHEET 6 OF 9

© 2006 R.W. BUILDING CONSULTANTS INC.

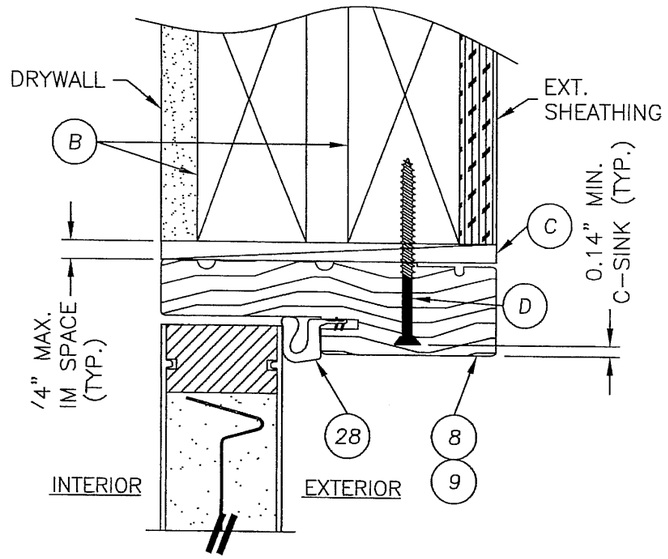

1/7 VERTICAL CROSS SECTION
@ HEAD
SMOOTH STAR PANEL SHOWN
SEE DOOR PANEL DETAILS FOR
OPTIONAL PANEL TYPES

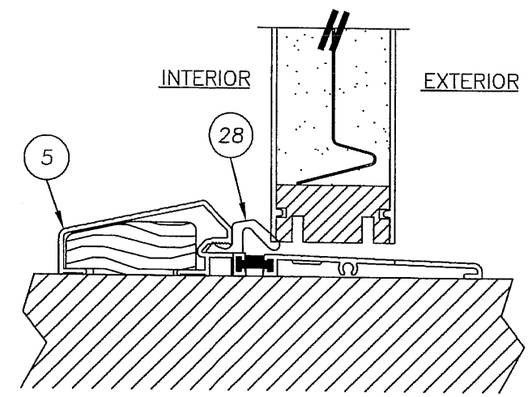

3/7 VERTICAL CROSS SECTION
@ THRESHOLD
SMOOTH STAR PANEL SHOWN
SEE DOOR PANEL DETAILS FOR
OPTIONAL PANEL TYPES

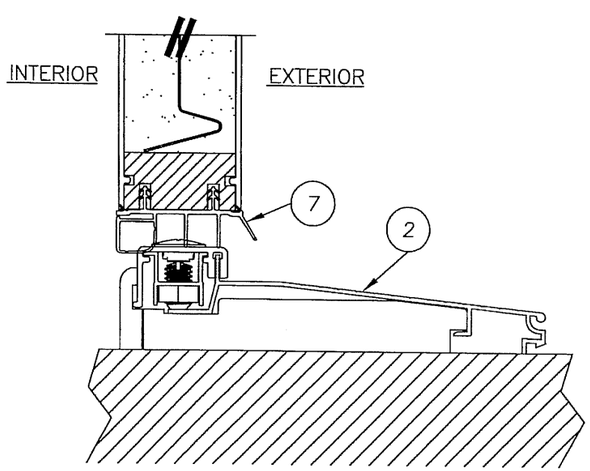

4/7 VERTICAL CROSS SECTION
@ THRESHOLD
SMOOTH STAR PANEL SHOWN
SEE DOOR PANEL DETAILS FOR
OPTIONAL PANEL TYPES

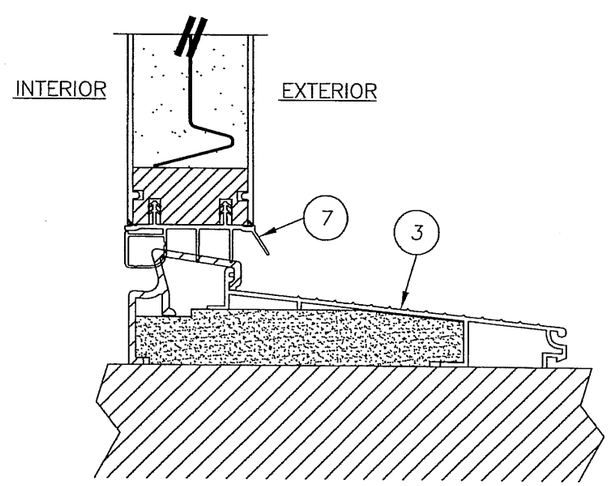

5/7 VERTICAL CROSS SECTION
@ THRESHOLD
SMOOTH STAR PANEL SHOWN
SEE DOOR PANEL DETAILS FOR
OPTIONAL PANEL TYPES

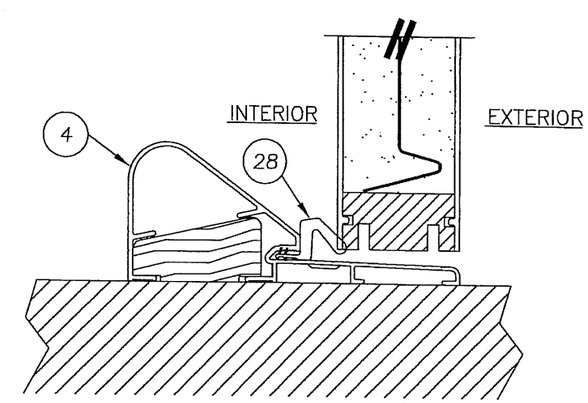

6/7 VERTICAL CROSS SECTION
@ THRESHOLD
SMOOTH STAR PANEL SHOWN
SEE DOOR PANEL DETAILS FOR
OPTIONAL PANEL TYPES

Documents Prepared By:
R.W. BUILDING CONSULTANTS, INC.
P.O. Box 230 Valrico FL. 33595
Phone No.: 813.659.9197
Florida Board of Professional Engineers
Certificate Of Authorization No. 9813
Wendell W. Haney, P.E. No. 54158
2-14-07

PRODUCT: SINGLE OPAQUE FIBERGLASS DOOR "IMPACT" INSWING / OUTSWING

PART OR ASSEMBLY: VERTICAL CROSS SECTIONS

NO.	DATE	REVISIONS	BY

DATE: 12/15/06
SCALE: N.T.S.
DWG. BY: AEM
CHK. BY: WWH
DRAWING NO.: TX-3166
SHEET 7 OF 9

© 2006 R.W. BUILDING CONSULTANTS INC.

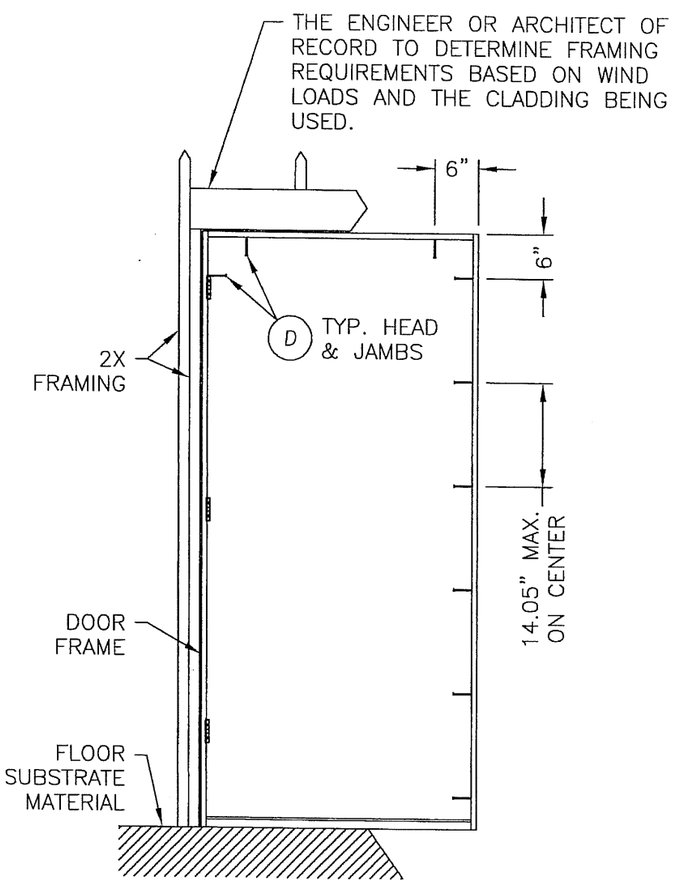

ANCHORING FOR
DP <= 68 PSF

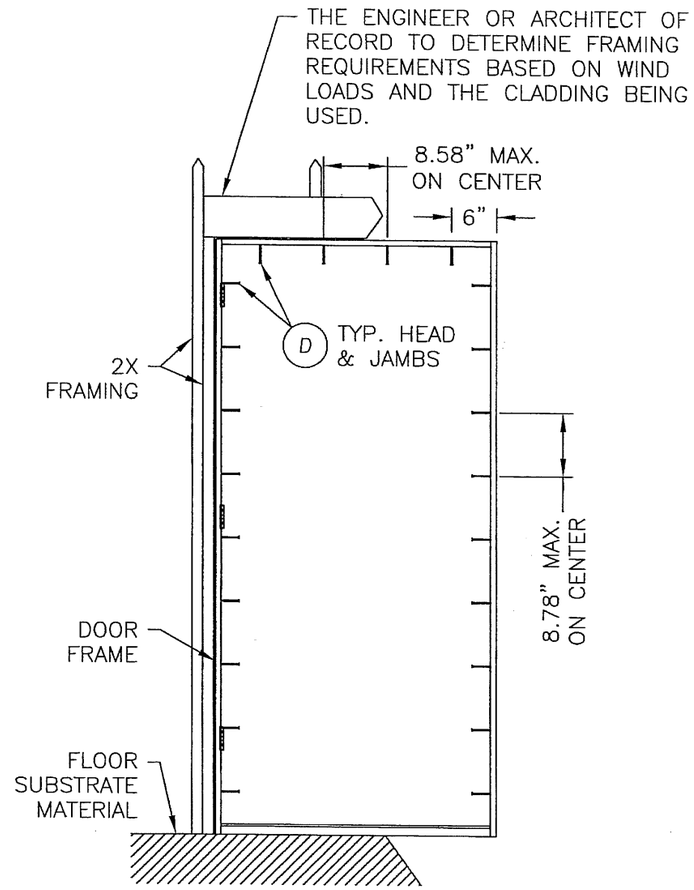

ANCHORING FOR
68 PSF < DP <= 100 PSF

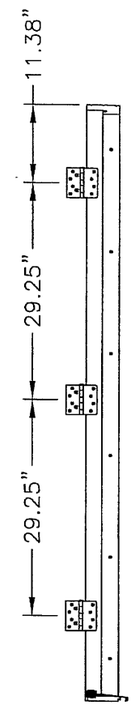

HINGE DETAIL

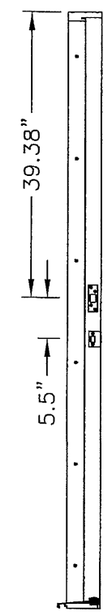

STRIKE PLATE DETAIL

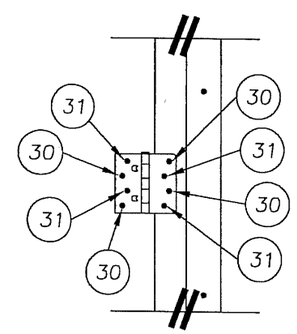

HINGE DETAIL

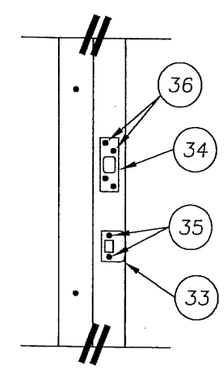

STRIKE PLATE DETAIL

Documents Prepared By:

R.W. BUILDING CONSULTANTS, INC.
P.O. Box 230 Valrico FL. 33595
Phone No.: 813.659.9197
Florida Board of Professional Engineers
Certificate Of Authorization No. 9813

Wendell W. Haney, P.E. No. 54158

PRODUCT:
SINGLE OPAQUE FIBERGLASS DOOR "IMPACT" INSWING / OUTSWING

PART OR ASSEMBLY:
FRAME ANCHORING

NO.	DATE	REVISIONS	BY

DATE: 12/15/06
SCALE: N.T.S.
DWG. BY: AEM
CHK. BY: WWH
DRAWING NO.: TX-3166
SHEET 8 OF 9

© 2006 R.W. BUILDING CONSULTANTS INC.

BILL OF MATERIALS		
ITEM	DESCRIPTION	MATERIAL
B	2X FRAMING	WOOD
C	1/4" MAX. SHIM SPACE	WOOD
D	#10 X 2-1/2" PFH WOOD SCREW	STEEL
G	KWIKSET 200 SERIES PASSAGE LOCK	STEEL
H	KWIKSET 600 SERIES DEADBOLT	STEEL
1	INSWING ADJUSTABLE THRESHOLD (IS300AJ)	ALUM./WOOD
2	INSWING THRESHOLD (IS300HP5)	–
3	INSWING SELF ADJUST THERMAL BREAK THRESHOLD (ISP30M)	ALUM./COMP.
4	OUTSWING COASTAL THRESHOLD	ALUM./WOOD
5	OUTSWING STANDARD THRESHOLD	ALUM./WOOD
6	INSWING THRESHOLD	–
7	DOOR BOTTOM SWEEP	VINYL
8	JAMB (PINE)	WOOD
9	JAMB (OAK)	WOOD
10	HINGE STILE (SMOOTH STAR)	WOOD
11	LOCK STILE (SMOOTH STAR)	LVL/WOOD
12	TOP RAIL (SMOOTH STAR)	PVC
13	BOTTOM RAIL (SMOOTH STAR)	PVC
14	PANEL REINFORCEMENT 0.023" THK. (SMOOTH STAR)	STEEL
15	DOOR SKIN 0.072" THK. (SMOOTH STAR) Fy = 6,000 PSI MIN.	FIBERGLASS
16	HINGE STILE (CLASSIC CRAFT)	WOOD/LVL
17	LOCK STILE (CLASSIC CRAFT)	WOOD/LVL
18	TOP RAIL (CLASSIC CRAFT)	PVC
19	BOTTOM RAIL (CLASSIC CRAFT)	PVC
20	PANEL REINFORCEMENT 0.023" THK. (CLASSIC CRAFT)	STEEL
21	DOOR SKIN 0.090" THK. (CLASSIC CRAFT) Fy = 6,000 PSI MIN.	FIBERGLASS
22	LOCK & HINGE STILE (CLASSIC CRAFT RUSTIC)	WOOD/LVL
23	TOP RAIL (CLASSIC CRAFT RUSTIC)	WOOD
24	BOTTOM RAIL (CLASSIC CRAFT RUSTIC)	PVC
25	PANEL REINFORCEMENT 0.023" THK. (CLASSIC CRAFT RUSTIC)	STEEL
26	DOOR SKIN 0.090" THK. (CC RUSTIC) Fy = 6,000 PSI MIN.	FIBERGLASS
27	FOAM CORE	POLYURETHANE
28	WEATHERSTRIP	FOAM
29	HINGE	STEEL
30	#10 X 2-1/2" PFH SCREW	STEEL
31	#10 X 3/4" PFH SCREW	STEEL
32	#9 X 3" PFH WOOD SCREW	STEEL
33	LATCH STRIKE PLATE	STEEL
34	SECURITY STRIKE PLATE (SINGLE DOOR ONLY)	STEEL
35	#8 X 3" PFH SCREW	STEEL
36	#8 X 3" PFH SCREW	STEEL
37	DEADBOLT STRIKE PLATE	STEEL
52	DOOR BOTTOM SWEEP	VINYL
60	HINGE STILE (FIBER CLASSIC)	WOOD
61	LOCK STILE (FIBER CLASSIC)	LVL/WOOD
62	TOP RAIL (FIBER CLASSIC)	PVC
63	BOTTOM RAIL (FIBER CLASSIC)	PVC
64	PANEL REINFORCEMENT 0.023" THK. (FIBER CLASSIC)	STEEL
65	DOOR SKIN 0.072" THK. (FIBER CLASSIC) Fy = 6,000 PSI MIN.	FIBERGLASS

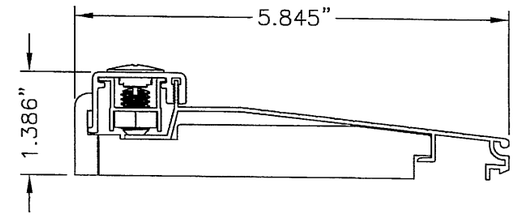

2 THRESHOLD
INSWING ADJUSTABLE

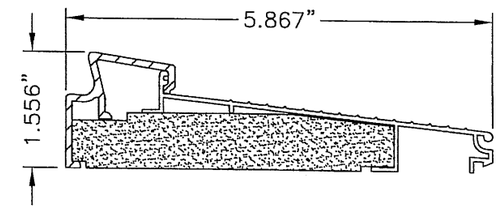

3 THRESHOLD
INSWING SELF-ADJUST

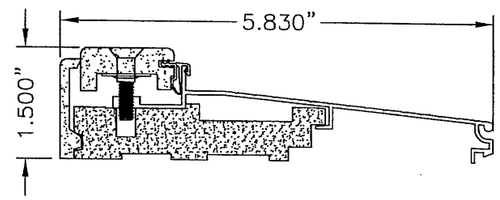

6 THRESHOLD
INSWING
MAX. DP RATING = +/- 50.0 PSF

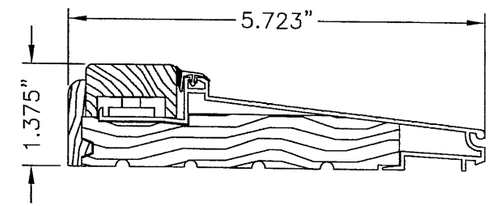

1 THRESHOLD
INSWING ADJUSTABLE

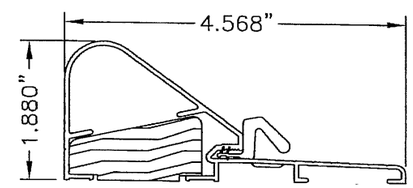

4 THRESHOLD
OUTSWING COASTAL

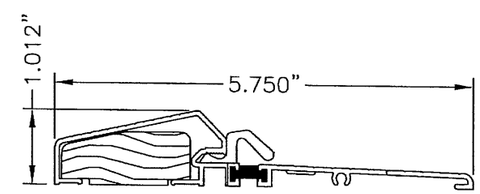

5 THRESHOLD
OUTSWING STANDARD

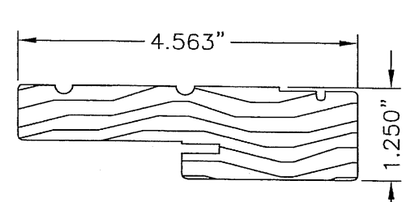

9 8 JAMB

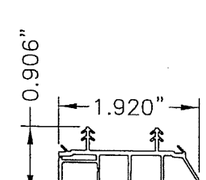

7 SWEEP

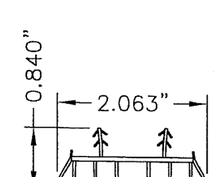

52 SWEEP

Documents Prepared By:
RW BUILDING CONSULTANTS, INC.
P.O. Box 230 Valrico FL. 33595
Phone No.: 813.659.9197
Florida Board of Professional Engineers
Certificate Of Authorization No. 9813
Wendell W. Harvey, P.E. No. 54158
2-14-07

PRODUCT:
SINGLE OPAQUE
FIBERGLASS DOOR
"IMPACT" INSWING / OUTSWING

PART OR ASSEMBLY:
BILL OF MATERIALS
& COMPONENTS

NO.	DATE	BY

REVISIONS

DATE: 12/15/06
SCALE: N.T.S.
DWG. BY: AEM
CHK. BY: WWH
DRAWING NO.: TX-3166
SHEET 9 OF 9

© 2006 R.W. BUILDING CONSULTANTS INC.

THERMA-TRU®

118 INDUSTRIAL DR., EDGERTON, OH 43517
TEL. (419)298-1740

SMOOTH STAR, FIBER CLASSIC, CLASSIC CRAFT & CLASSIC CRAFT RUSTIC

SINGLE "IMPACT" DOOR WITH "NON-IMPACT" SIDELITE INSWING / OUTSWING

EVALUATED FOR USE IN THE STATE OF TEXAS

THE THERMA–TRU FIBERGLASS DOOR DESCRIBED HEREIN COMPLIES WITH THE INTERNATIONAL RESIDENTIAL CODE (IRC), SECTIONS R301 & R613 AND THE INTERNATIONAL BUILDING CODE (IBC), SECTIONS 1714.5 1405.12, 1609, 2403 AND 2404 (INCLUDING TEXAS REVISIONS) SUBJECT TO THE FOLLOWING CONDITIONS:

1. Anchors shall be as listed and spaced as shown in the details. Anchor embedment to base material shall be beyond wall dressing or stucco.
2. When used in wind borne debris regions (SEAWARD and INLAND I ZONES), the Product complies with Sections R301.2.1.2 and 1609.1.4 as an impact resistant product and does not require the use of an approved impact resistant covering. This product does not meet the requirements for enhanced protection of essential facilities as defined in ASTM E1996.
3. Allowable design pressure requirements must be equal to or less than the design pressure rating shown in the design pressure chart, sheet 1 of this drawing.
4. Conditions not covered by this drawing are subject to further engineering analysis.

SUPPORTING DOCUMENTS & EVIDENCE

1. Testing per TAS 201–94, TAS 202–94 and TAS 203–94 as performed by Testing Evaluation Laboratories Inc. and reported in test report number TEL 06–1031–1 Revised, dated February 14, 2007 and signed by Wendell W. Haney, P.E.
2. Testing per TAS 201–94, TAS 202–94 and TAS 203–94 as performed by Testing Evaluation Laboratories Inc. and reported in test report number TEL 06–1031–4, dated October 31, 2006 and signed by Wendell W. Haney, P.E.
3. Anchor analysis for loading conditions prepared, signed and sealed by Wendell W. Haney, P.E. Glass load resistance report ASTM E1300–00, prepared by Wendell W. Haney, P.E..
4. Certificate of Participation issued by the National Accreditation and Management Institute, Inc., certifying that Therma–Tru Corporation. is manufacturing products within a Quality Assurance program.

TABLE OF CONTENTS

SHEET #	DESCRIPTION
1	TYPICAL ELEVATIONS, DESIGN PRESSURES & GENERAL NOTES
2	DOOR PANEL DETAILS (SMOOTH STAR)
3	DOOR PANEL DETAILS (CLASSIC CRAFT)
4	DOOR PANEL DETAILS (CLASSIC CRAFT RUSTIC)
5	DOOR PANEL DETAILS (FIBER CLASSIC)
6	SIDELITE PANEL DETAILS
7	HORIZONTAL CROSS SECTIONS & GLAZING DETAILS
8	VERTICAL CROSS SECTIONS
9	VERTICAL CROSS SECTIONS
10	FRAME ANCHORING
11	COMPONENTS
12	BILL OF MATERIALS & COMPONENTS

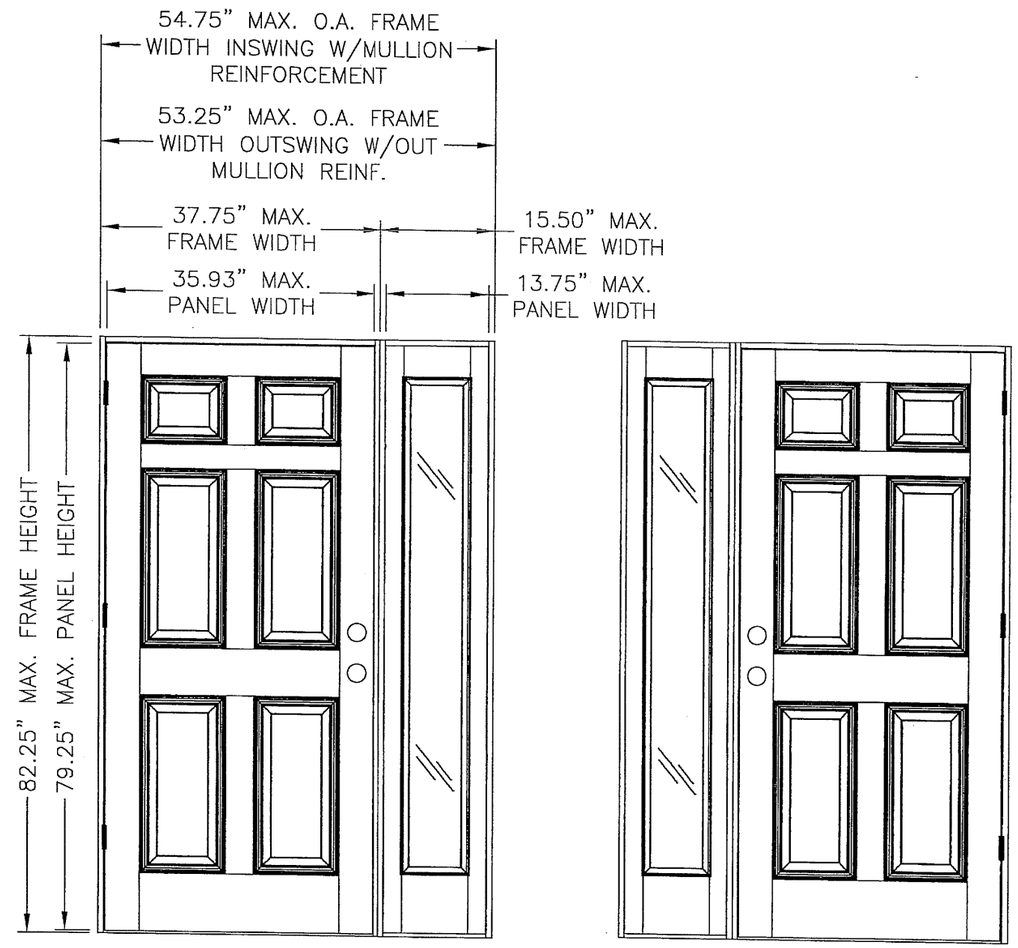

"SMOOTH STAR", "CLASSIC CRAFT", "CLASSIC CRAFT RUSTIC" & "FIBER CLASSIC"

OUTSWING UNIT SHOWN

DOOR TYPE	SWING	OVERALL FRAME DIMENSION	OVERALL SIDELITE D.L.O. DIMENSION	DESIGN PRESSURE	
				POSITIVE	NEGATIVE
CLASSIC CRAFT	OUTSWING	53.25" X 80.75"	7.09" X 63.09"	+65.0	–65.0
	INSWING	54.75" X 82.25"		+65.0	–65.0
FIBER CLASSIC	OUTSWING	53.25" X 80.75"		+65.0	–65.0
	INSWING	54.75" X 82.25"		+65.0	–65.0
SMOOTH STAR	OUTSWING	53.25" X 80.75"		+65.0	–65.0
	INSWING	54.75" X 82.25"		+65.0	–65.0
RUSTIC	OUTSWING	53.25" X 80.75"		+65.0	–65.0
	INSWING	54.75" X 82.25"		+65.0	–65.0

Documents Prepared By:
RW BUILDING CONSULTANTS, INC.
P.O. Box 230 Valrico FL. 33595
Phone No.: 813.659.9197
Florida Board of Professional Engineers
Certificate Of Authorization No. 9813
Wendell W. Haney, P.E. No. 54158
2-14-07

PRODUCT: SINGLE OPAQUE FIBERGLASS DOOR W/SIDELITE "IMPACT" INSWING / OUTSWING

PART OR ASSEMBLY: TYPICAL ELEVATIONS, DESIGN PRESSURES & GENERAL NOTES

NO.	DATE	BY	REVISIONS

DATE: 12/15/06
SCALE: N.T.S.
DWG. BY: AEM
CHK. BY: WWH
DRAWING NO.: TX–3167
SHEET 1 OF 12

© 2006 R.W. BUILDING CONSULTANTS INC.

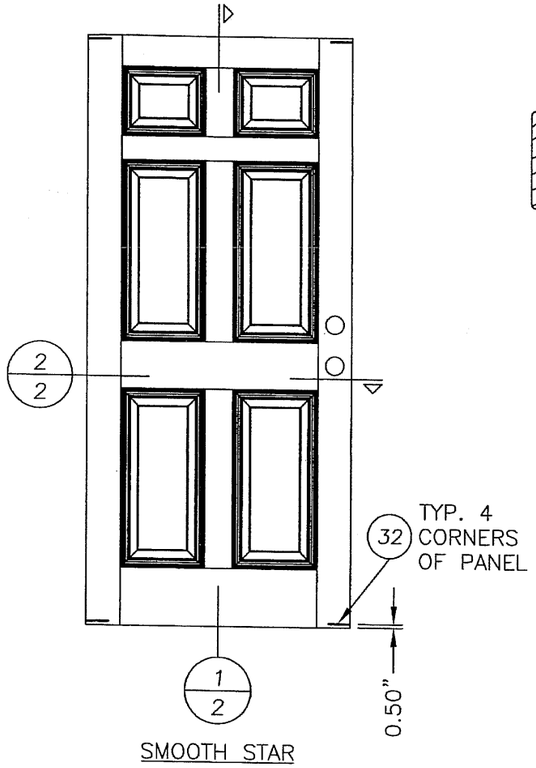

SMOOTH STAR

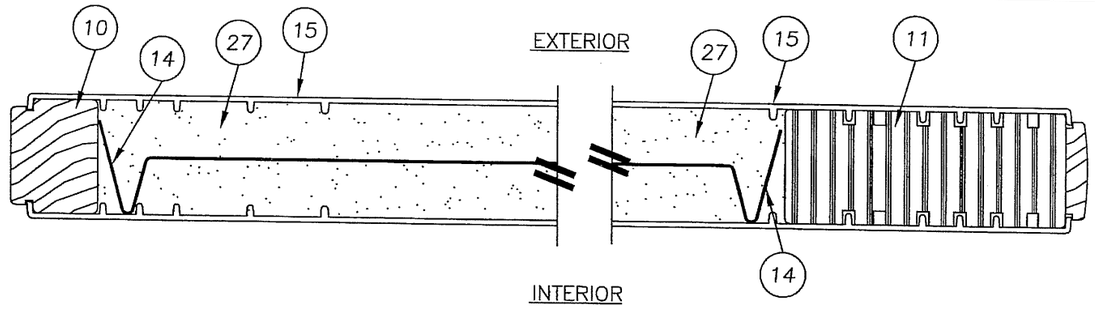

2/2 HORIZONTAL CROSS SECTION
SMOOTH STAR

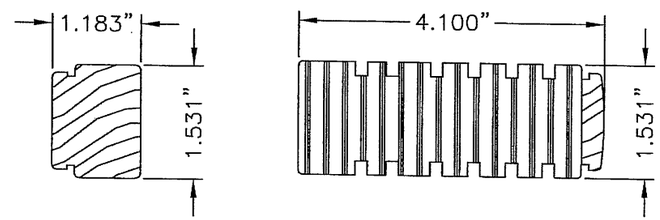

10 HINGE STILE
SMOOTH STAR

11 LOCK STILE
SMOOTH STAR

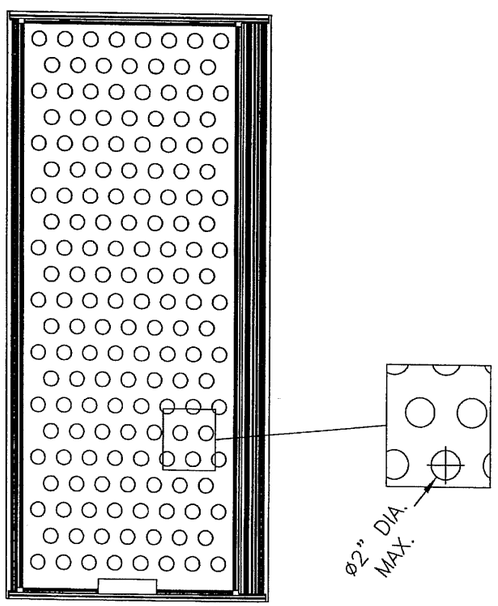

28.86% OPEN
AREA MAX.

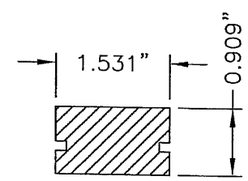

12 TOP RAIL
SMOOTH STAR

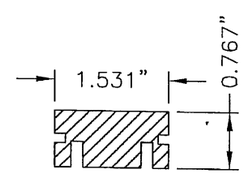

13 BOTTOM RAIL
SMOOTH STAR

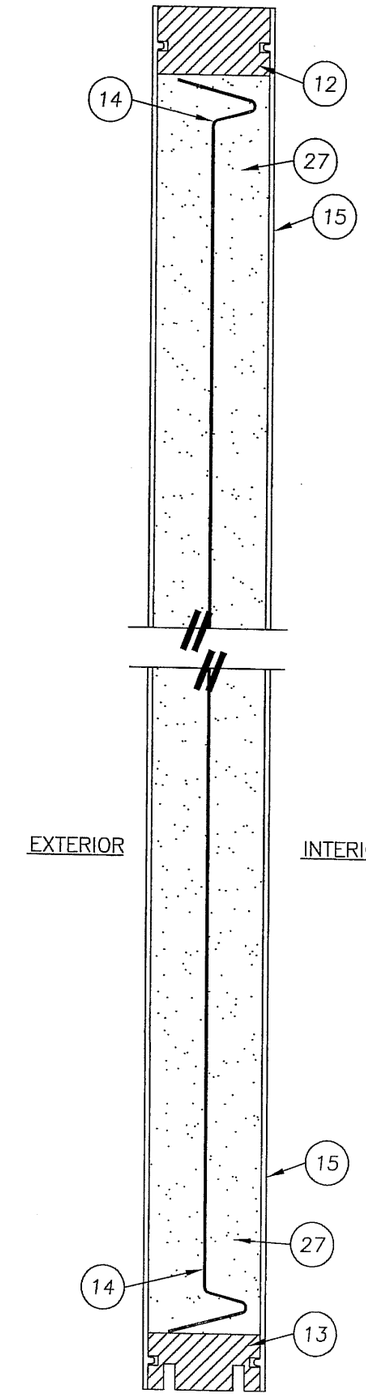

1/2 VERTICAL CROSS SECTION
SMOOTH STAR

Documents Prepared By:
R.W. BUILDING CONSULTANTS, INC.
P.O. Box 230 Valrico FL. 33595
Phone No.: 813.659.9197
Florida Board of Professional Engineers
Certificate Of Authorization No. 9813
Wendell W. Haney, P.E. No. 54158
2-14-07

PRODUCT:
SINGLE OPAQUE
FIBERGLASS DOOR W/SIDELITE
"IMPACT" INSWING / OUTSWING

PART OR ASSEMBLY:
DOOR PANEL DETAILS
(SMOOTH STAR)

NO.	DATE	REVISIONS	BY

DATE: 12/15/06
SCALE: N.T.S.
DWG. BY: AEM
CHK. BY: WWH
DRAWING NO.: TX-3167
SHEET 2 OF 12

© 2006 R.W. BUILDING CONSULTANTS INC.

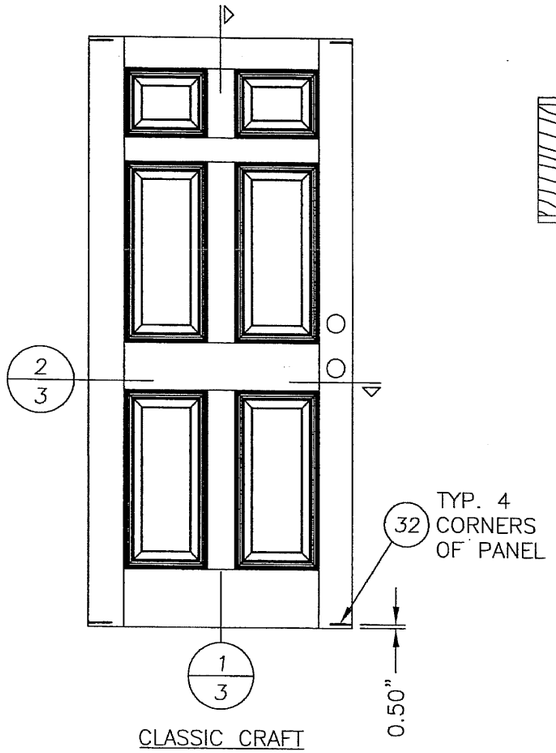

CLASSIC CRAFT

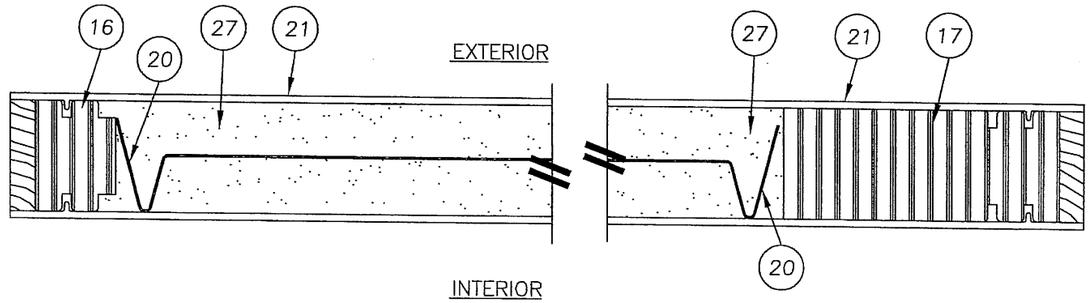

2/3 HORIZONTAL CROSS SECTION (CLASSIC CRAFT)

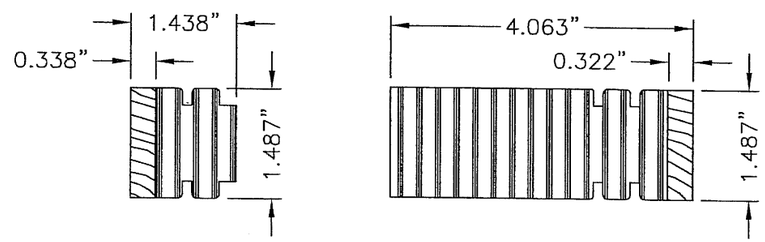

16 HINGE STILE CLASSIC CRAFT

17 LOCK STILE CLASSIC CRAFT

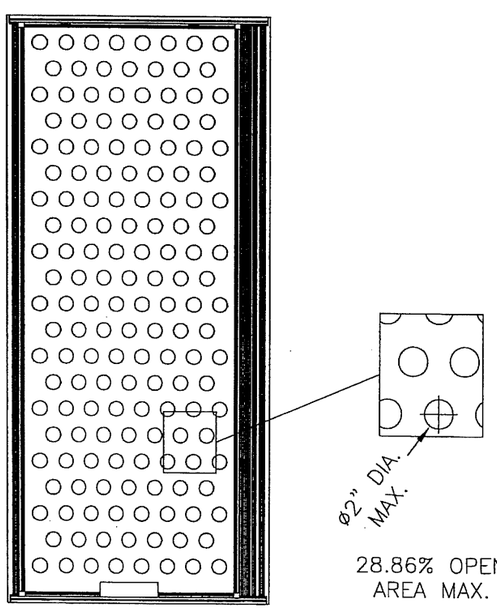

28.86% OPEN AREA MAX.

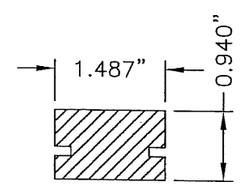

18 TOP RAIL CLASSIC CRAFT

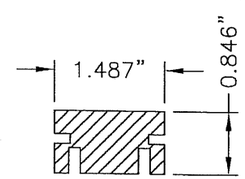

19 BOTTOM RAIL CLASSIC CRAFT

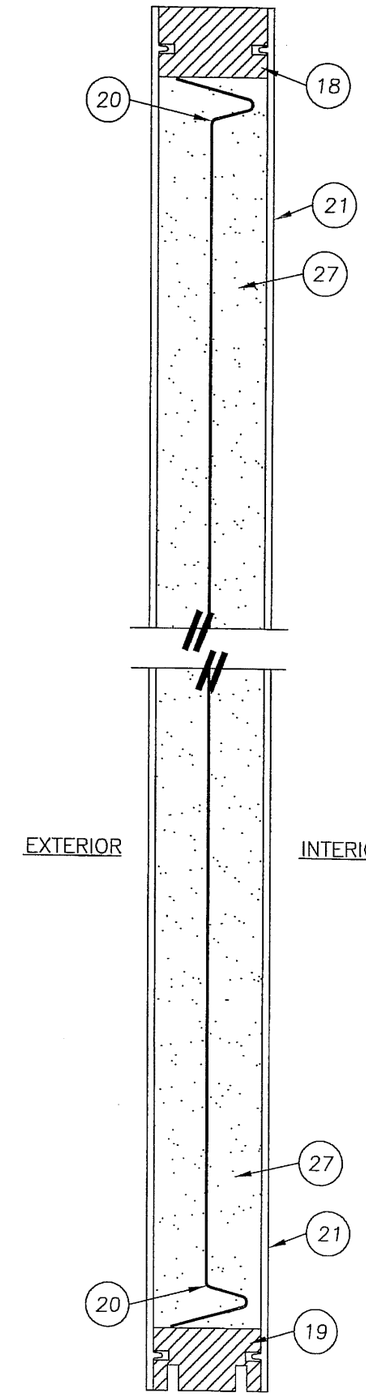

1/3 VERTICAL CROSS SECTION (CLASSIC CRAFT)

Documents Prepared By:
RW BUILDING CONSULTANTS, INC.
P.O. Box 230 Valrico FL. 33595
Phone No.: 813.659.9197
Florida Board of Professional Engineers
Certificate Of Authorization No. 9813
Wendell W. Haney, P.E. No. 54158
2-14-07

PRODUCT:
SINGLE OPAQUE FIBERGLASS DOOR W/SIDELITE "IMPACT" INSWING / OUTSWING

PART OR ASSEMBLY:
DOOR PANEL DETAILS (CLASSIC CRAFT)

NO.	DATE	REVISIONS	BY

DATE: 12/15/06
SCALE: N.T.S.
DWG. BY: AEM
CHK. BY: WWH
DRAWING NO.: TX-3167
SHEET 3 OF 12

© 2006 R.W. BUILDING CONSULTANTS INC.

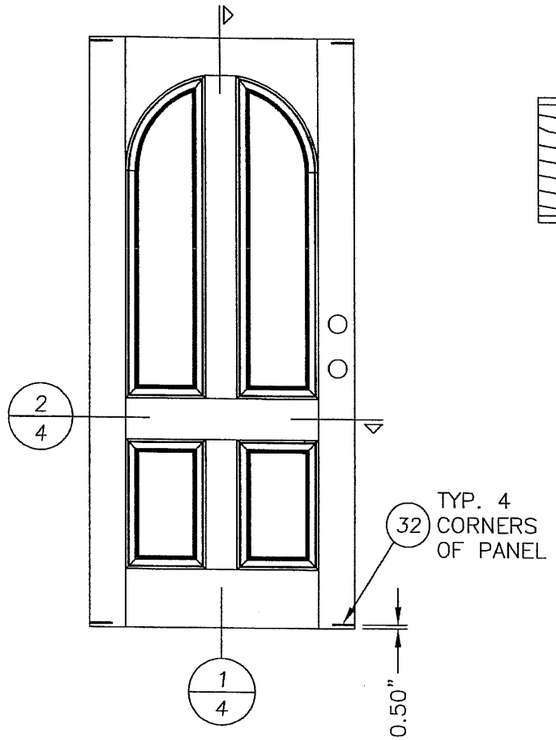

CLASSIC CRAFT RUSTIC

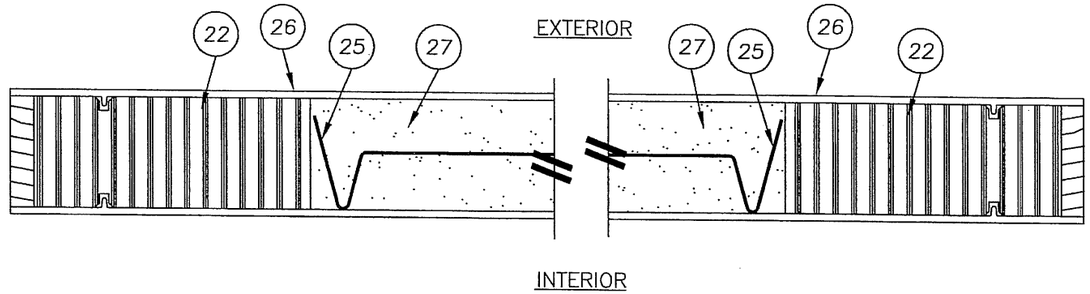

2/4 HORIZONTAL CROSS SECTION (CLASSIC CRAFT RUSTIC)

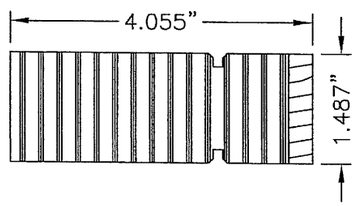

22 LOCK & HINGE STILE
CLASSIC CRAFT RUSTIC

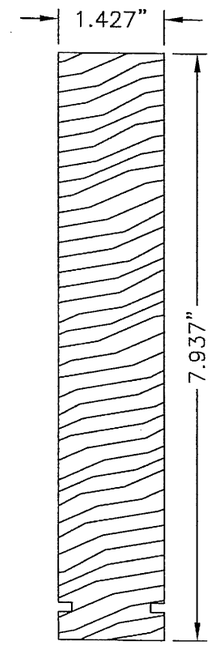

23 TOP RAIL
CLASSIC CRAFT RUSTIC

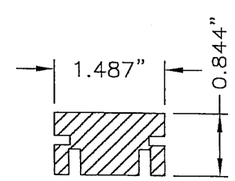

24 BOTTOM RAIL
CLASSIC CRAFT RUSTIC

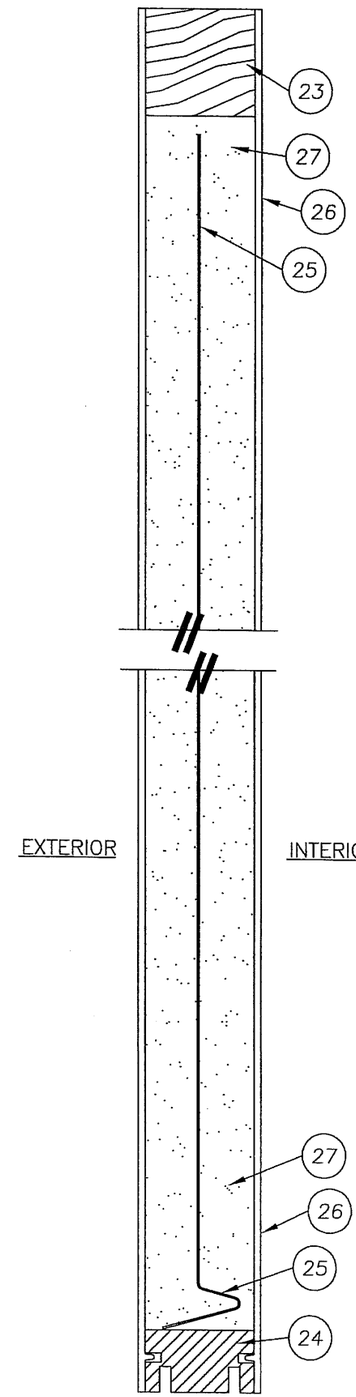

1/4 VERTICAL CROSS SECTION (CLASSIC CRAFT RUSTIC)

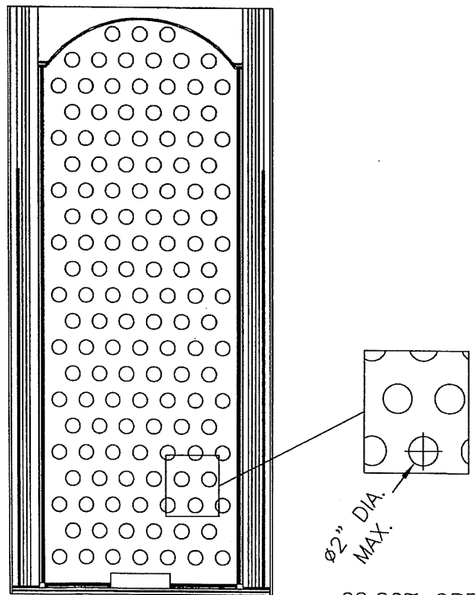

28.86% OPEN AREA MAX.

Documents Prepared By:

R.W. BUILDING CONSULTANTS, INC.
P.O. Box 230 Valrico FL. 33595
Phone No.: 813.659.9197
Florida Board of Professional Engineers
Certificate Of Authorization No. 9813
Wendell W. Haney, P.E. No. 54158
2-14-07

PRODUCT:
SINGLE OPAQUE FIBERGLASS DOOR W/SIDELITE "IMPACT" INSWING / OUTSWING

PART OR ASSEMBLY:
DOOR PANEL DETAILS (CLASSIC CRAFT RUSTIC)

NO.	DATE	REVISIONS	BY

DATE: 12/15/06
SCALE: N.T.S.
DWG. BY: AEM
CHK. BY: WWH
DRAWING NO.: TX-3167
SHEET 4 OF 12

© 2006 R.W. BUILDING CONSULTANTS INC.

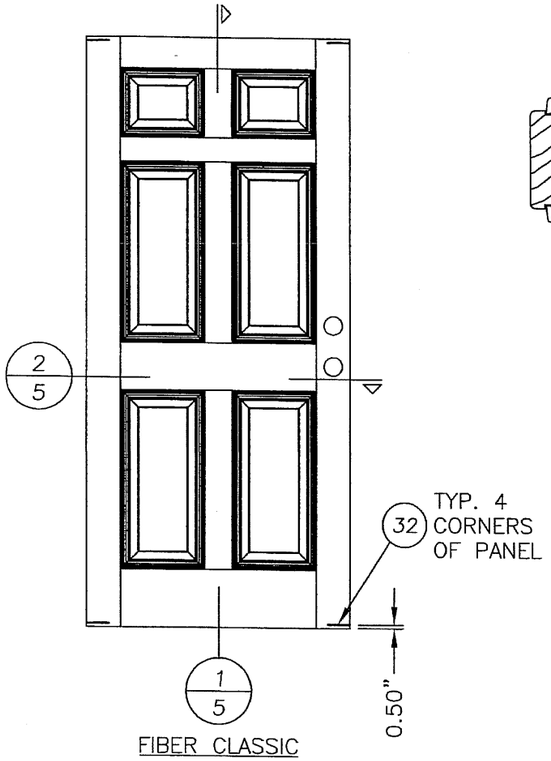

FIBER CLASSIC

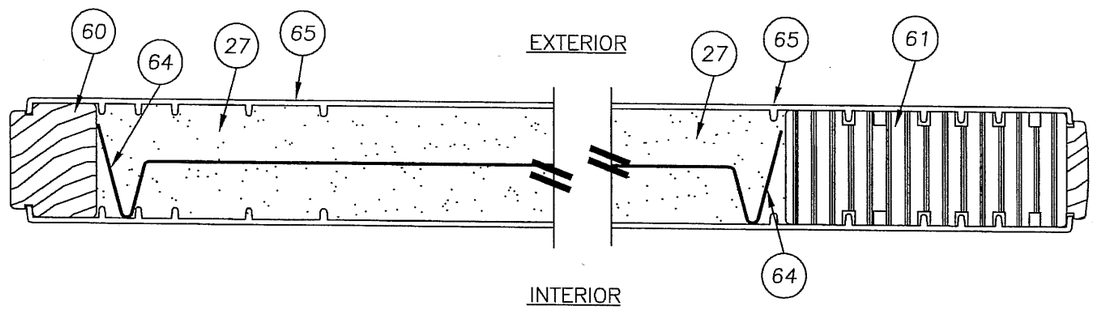

2/5 HORIZONTAL CROSS SECTION
FIBER CLASSIC

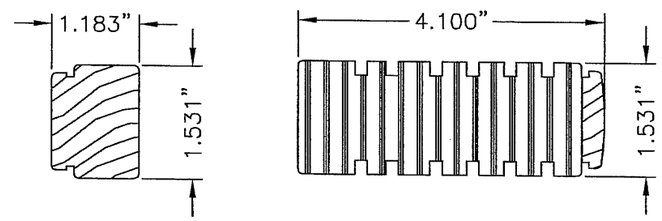

60 HINGE STILE
FIBER CLASSIC

61 LOCK STILE
FIBER CLASSIC

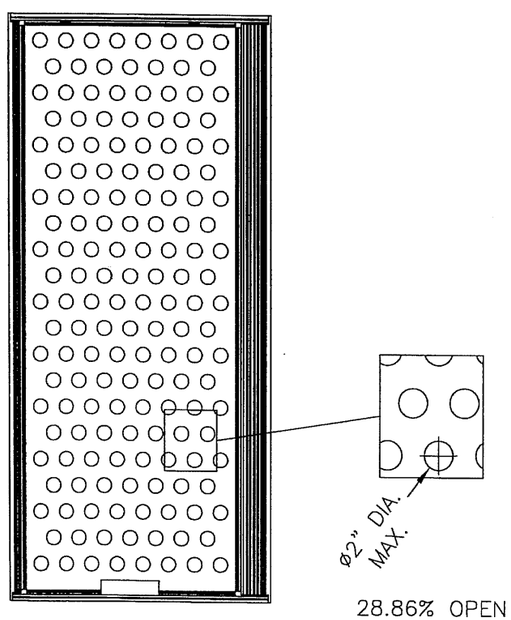

28.86% OPEN
AREA MAX.

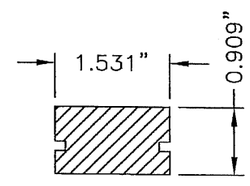

62 TOP RAIL
FIBER CLASSIC

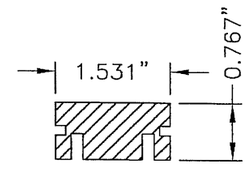

63 BOTTOM RAIL
FIBER CLASSIC

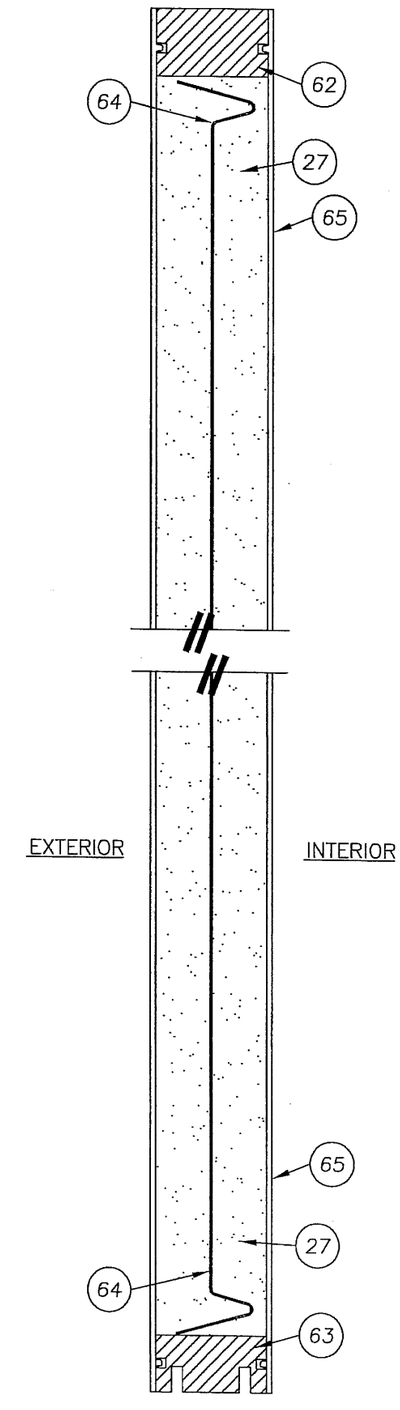

1/5 VERTICAL CROSS SECTION
FIBER CLASSIC

Documents Prepared By:
RW BUILDING CONSULTANTS, INC.
P.O. Box 230 Valrico FL. 33595
Phone No.: 813.659.9197
Florida Board of Professional Engineers
Certificate Of Authorization No. 9813
Wendell W. Haney, P.E. No. 54158
2-14-07

PRODUCT: SINGLE OPAQUE FIBERGLASS DOOR W/SIDELITE "IMPACT" INSWING / OUTSWING

PART OR ASSEMBLY: DOOR PANEL DETAILS (FIBER CLASSIC)

NO.	DATE	REVISIONS	BY

DATE: 12/15/06
SCALE: N.T.S.
DWG. BY: AEM
CHK. BY: WWH
DRAWING NO.: TX-3167
SHEET 5 OF 12

© 2006 R.W. BUILDING CONSULTANTS INC.

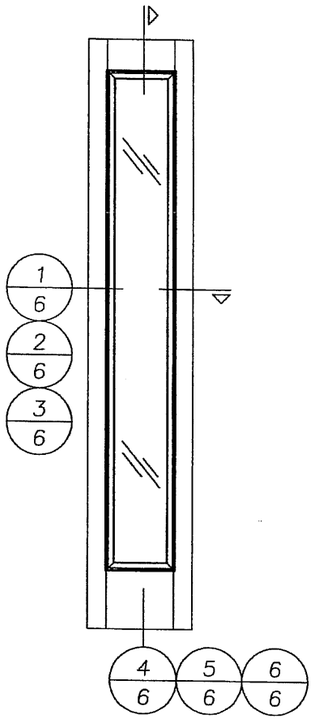

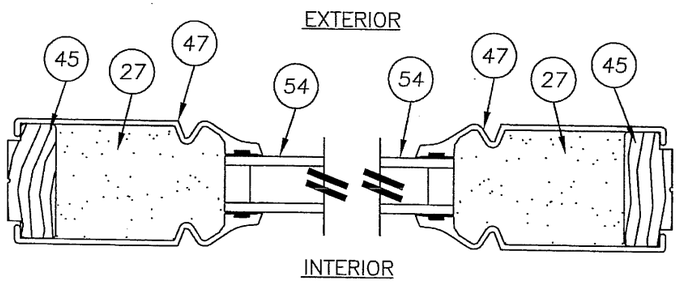

1/6 HORIZONTAL CROSS SECTION (CLASSIC CRAFT)

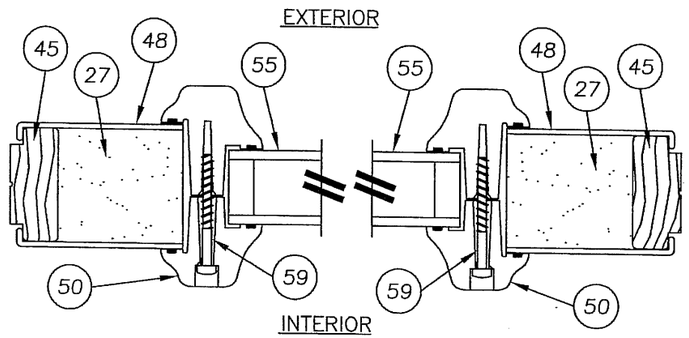

2/6 HORIZONTAL CROSS SECTION (FIBER CLASSIC)

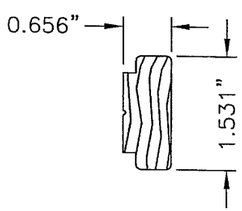

45 STILES & RAILS SIDELITE

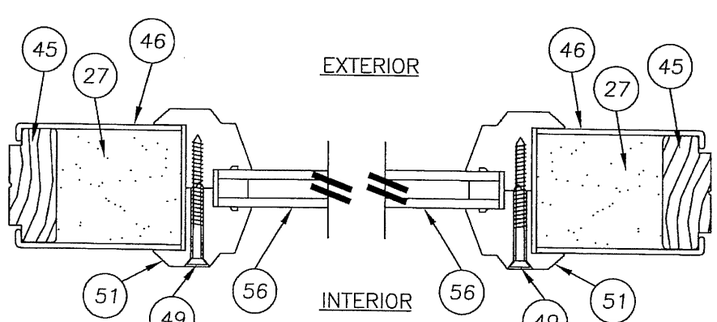

3/6 HORIZONTAL CROSS SECTION (SMOOTH STAR)

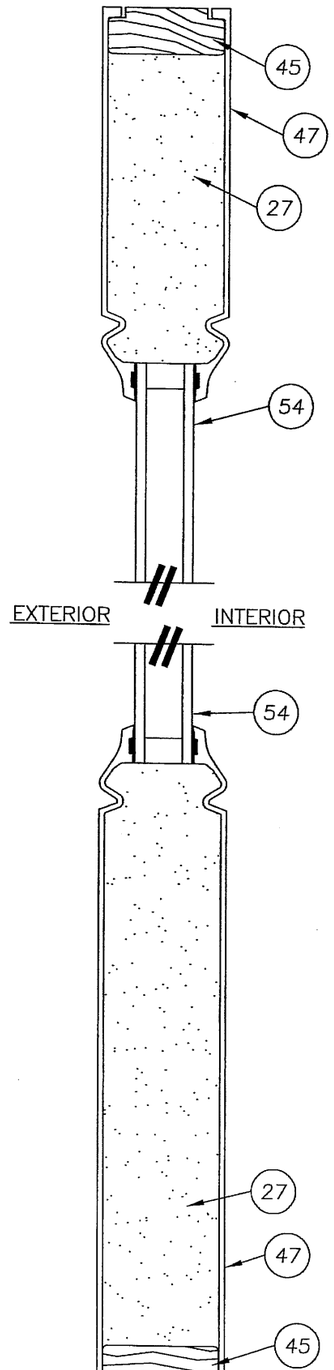

4/6 VERTICAL CROSS SECTION (CLASSIC CRAFT)

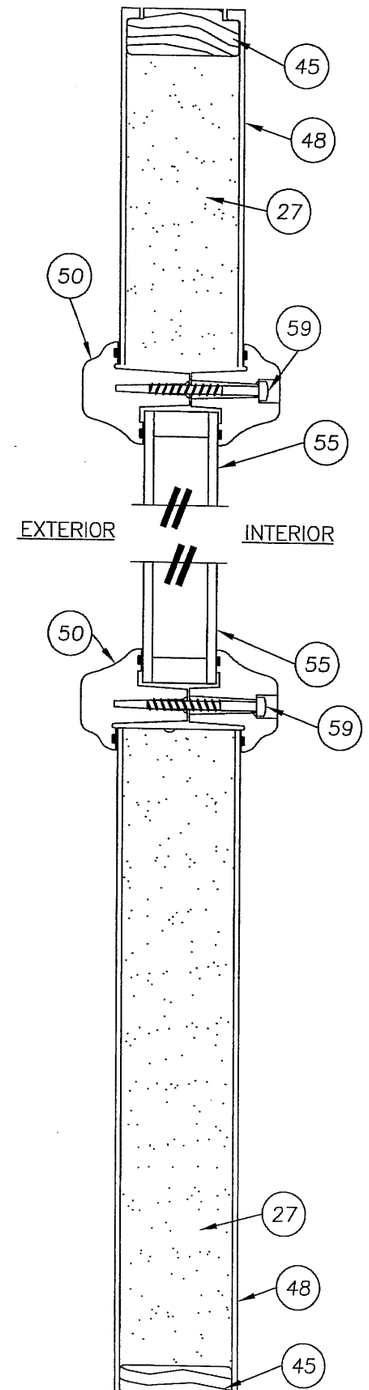

5/6 VERTICAL CROSS SECTION (FIBER CLASSIC)

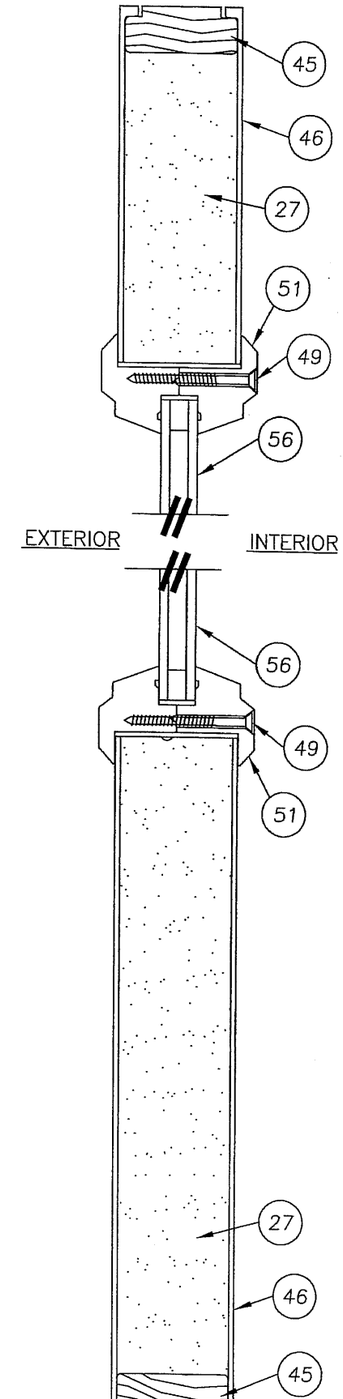

6/6 VERTICAL CROSS SECTION (SMOOTH STAR)

Documents Prepared By:
RW BUILDING CONSULTANTS, INC.
P.O. Box 230 Valrico FL. 33595
Phone No.: 813.659.9197
Florida Board of Professional Engineers
Certificate Of Authorization No. 9813
Wendell W. Harvey, P.E. No. 54158
2-14-07

PRODUCT: SINGLE OPAQUE FIBERGLASS DOOR W/SIDELITE "IMPACT" INSWING / OUTSWING

PART OR ASSEMBLY: SIDELITE PANEL DETAILS

NO.	DATE	REVISIONS	BY

DATE: 12/15/06
SCALE: N.T.S.
DWG. BY: AEM
CHK. BY: WWH
DRAWING NO.: TX-3167
SHEET 6 OF 12

© 2006 R.W. BUILDING CONSULTANTS INC.

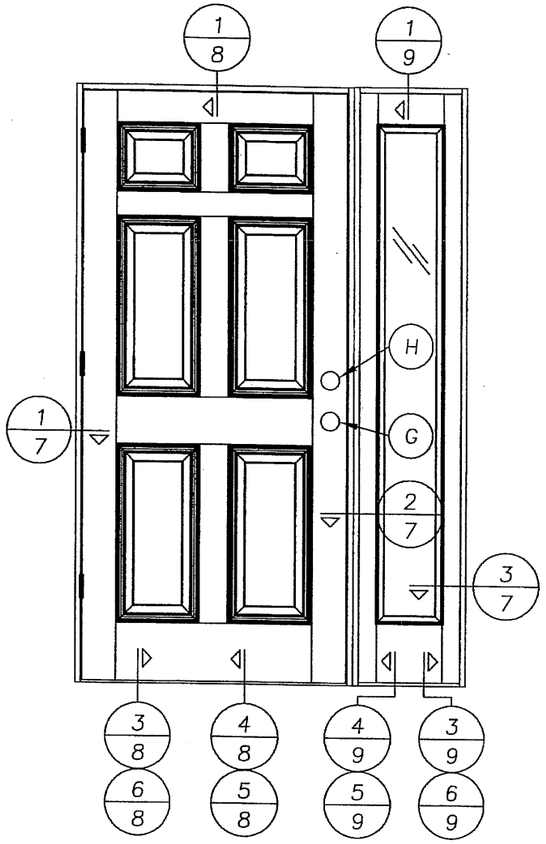

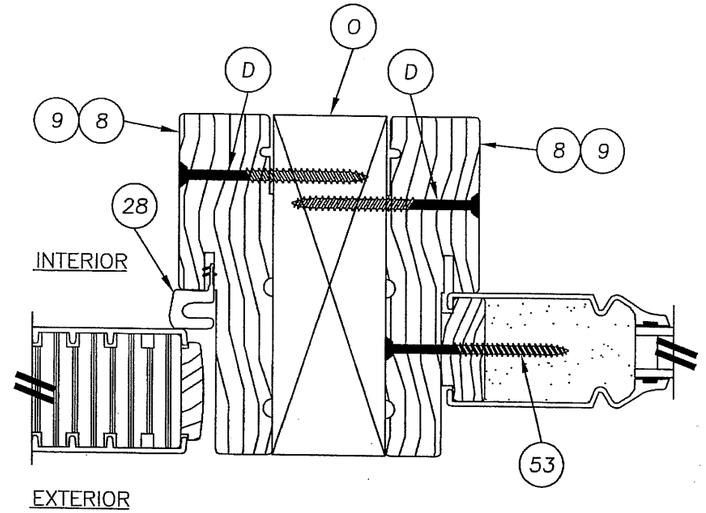

2/7 HORIZONTAL CROSS SECTION
@ LATCH (INSWING)
SMOOTH STAR PANEL SHOWN
SEE DOOR PANEL DETAILS FOR
OPTIONAL PANEL TYPES

FOR INSWING UNITS, THE DOOR FRAME AND SIDELITE FRAME ARE BOTH ANCHORED TO THE 2X MULLION REINFORCEMENT.

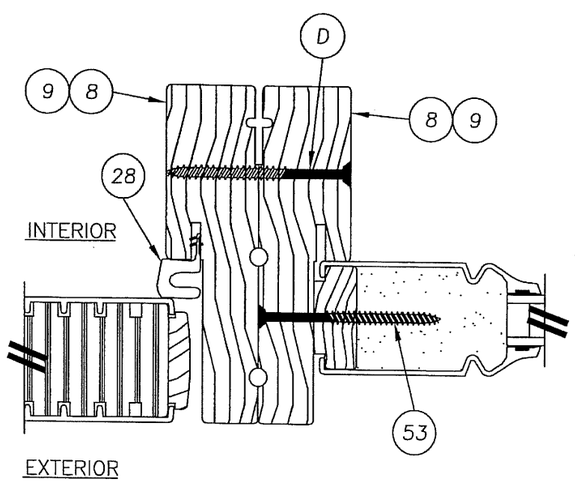

2/7 HORIZONTAL CROSS SECTION
@ LATCH (OUTSWING)
SMOOTH STAR PANEL SHOWN
SEE DOOR PANEL DETAILS FOR
OPTIONAL PANEL TYPES

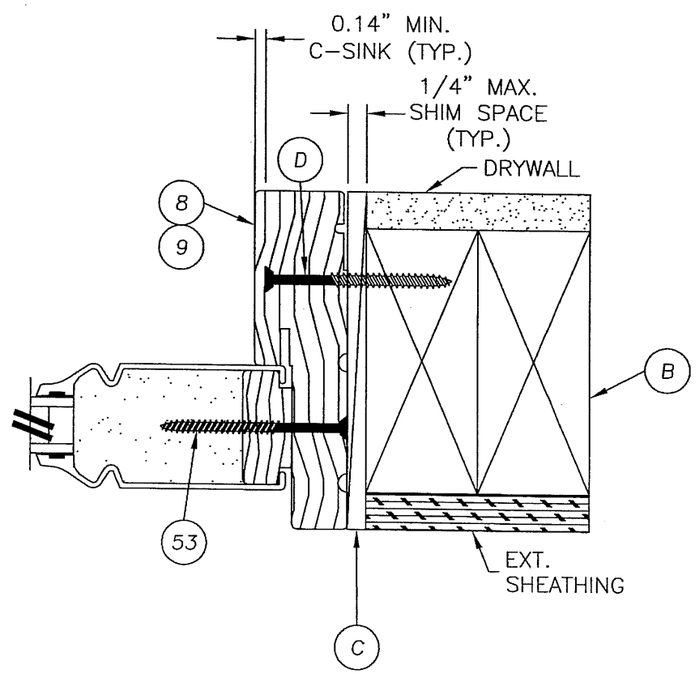

3/7 HORIZONTAL CROSS SECTION
@ SIDELITE
SMOOTH STAR PANEL SHOWN
SEE DOOR PANEL DETAILS FOR
OPTIONAL PANEL TYPES

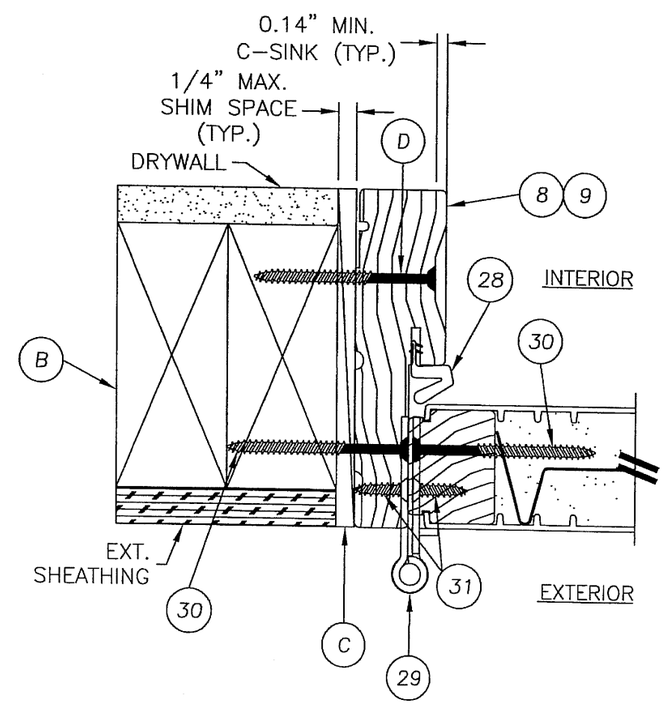

1/7 HORIZONTAL CROSS SECTION
@ HINGE
SMOOTH STAR PANEL SHOWN
SEE DOOR PANEL DETAILS FOR
OPTIONAL PANEL TYPES

Documents Prepared By:
RW BUILDING CONSULTANTS, INC.
P.O. Box 230 Valrico FL. 33595
Phone No.: 813.659.9197
Florida Board of Professional Engineers
Certificate Of Authorization No. 9813
Wendell W. Haney, P.E. No. 54158
Wendell W. Haney 214-07

PRODUCT: SINGLE OPAQUE FIBERGLASS DOOR W/SIDELITE "IMPACT" INSWING / OUTSWING
PART OR ASSEMBLY: HORIZONTAL CROSS SECTIONS & GLAZING DETAILS

NO.	DATE	REVISIONS	BY

DATE: 12/15/06
SCALE: N.T.S.
DWG. BY: AEM
CHK. BY: WWH
DRAWING NO.: TX-3167
SHEET 7 OF 12

© 2006 R.W. BUILDING CONSULTANTS INC.

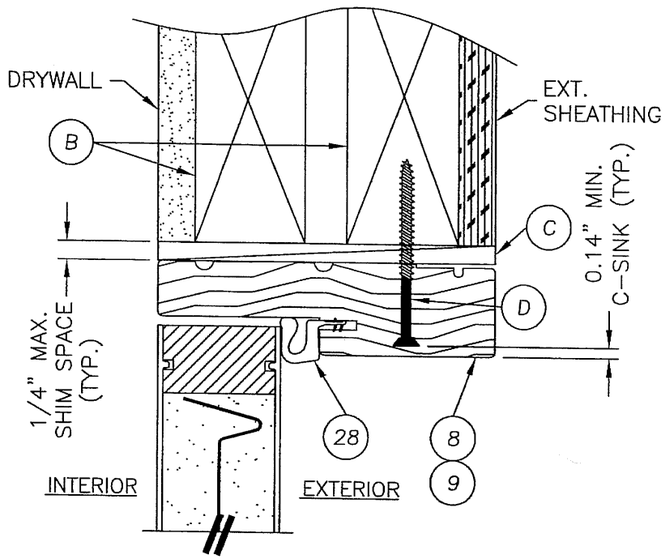

1/8 VERTICAL CROSS SECTION
@ HEAD
SMOOTH STAR PANEL SHOWN
SEE DOOR PANEL DETAILS FOR
OPTIONAL PANEL TYPES

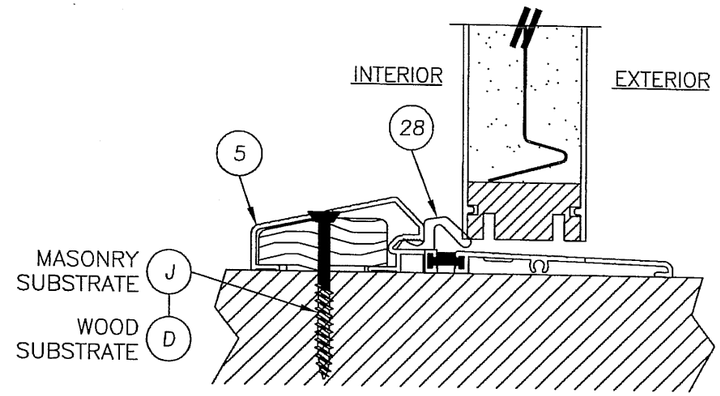

3/8 VERTICAL CROSS SECTION
@ THRESHOLD
SMOOTH STAR PANEL SHOWN
SEE DOOR PANEL DETAILS FOR
OPTIONAL PANEL TYPES

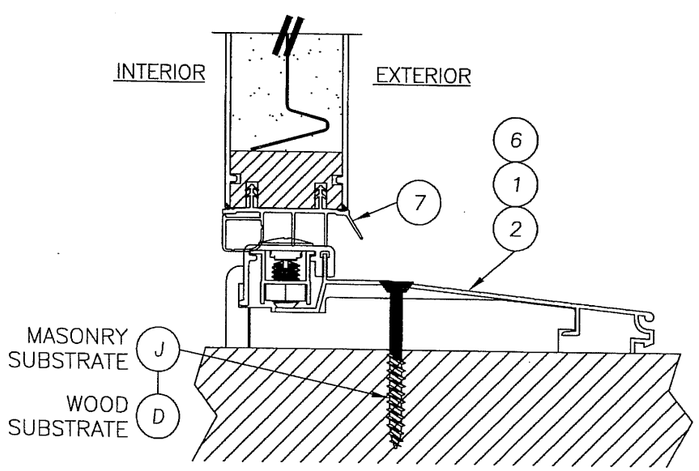

4/8 VERTICAL CROSS SECTION
@ THRESHOLD
SMOOTH STAR PANEL SHOWN
SEE DOOR PANEL DETAILS FOR
OPTIONAL PANEL TYPES

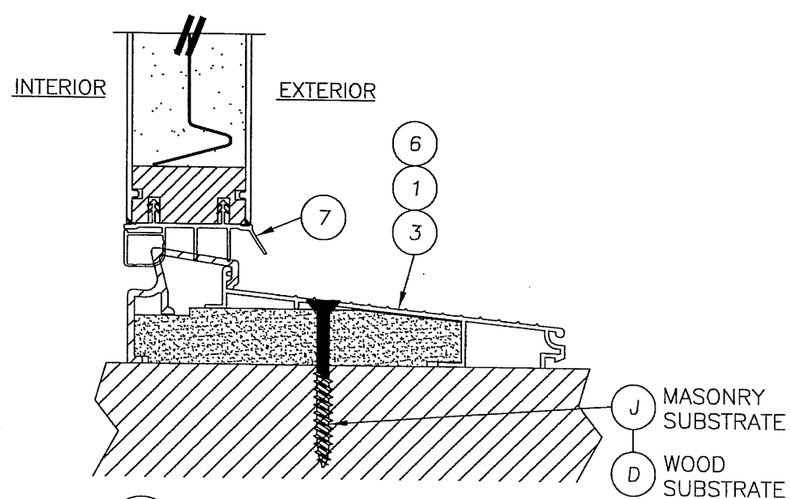

5/8 VERTICAL CROSS SECTION
@ THRESHOLD
SMOOTH STAR PANEL SHOWN
SEE DOOR PANEL DETAILS FOR
OPTIONAL PANEL TYPES

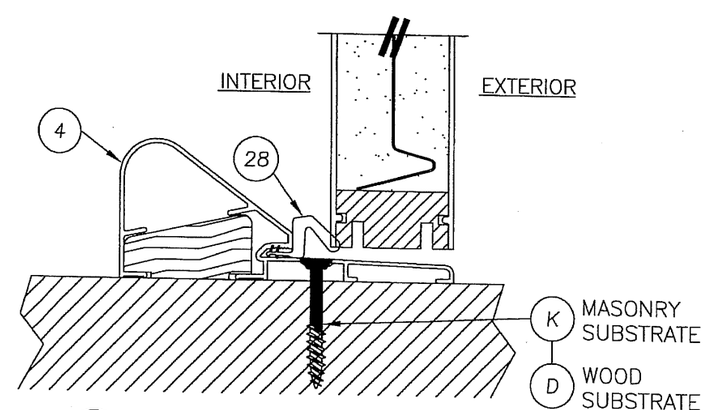

6/8 VERTICAL CROSS SECTION
@ THRESHOLD
SMOOTH STAR PANEL SHOWN
SEE DOOR PANEL DETAILS FOR
OPTIONAL PANEL TYPES

Documents Prepared By:
R.W. BUILDING CONSULTANTS, INC.
P.O. Box 230 Valrico FL. 33595
Phone No.: 813.659.9797
Florida Board of Professional Engineers
Certificate Of Authorization No. 9813
Wendell W. Hagey, P.E. No. 54158
2-14-07

PRODUCT:
SINGLE OPAQUE FIBERGLASS DOOR W/SIDELITE "IMPACT" INSWING / OUTSWING

PART OR ASSEMBLY:
VERTICAL CROSS SECTIONS

NO.	DATE	REVISIONS	BY

DATE: 12/15/06
SCALE: N.T.S.
DWG. BY: AEM
CHK. BY: WWH
DRAWING NO.: TX-3167
SHEET 8 OF 12

© 2006 R.W. BUILDING CONSULTANTS INC.

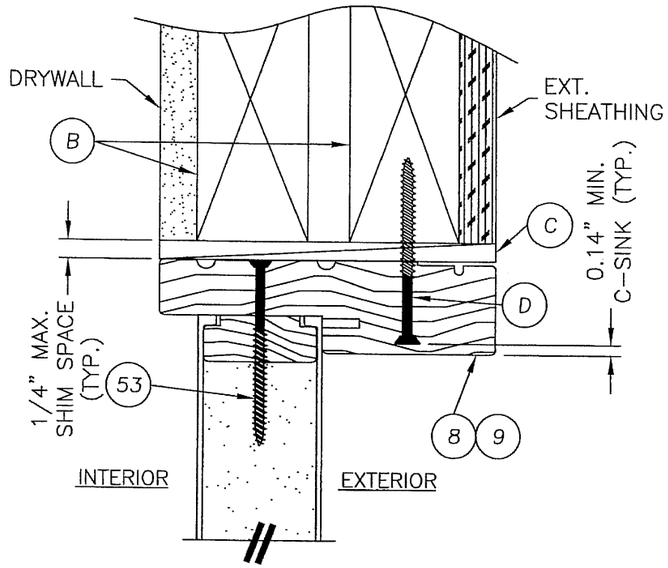

1/9 VERTICAL CROSS SECTION

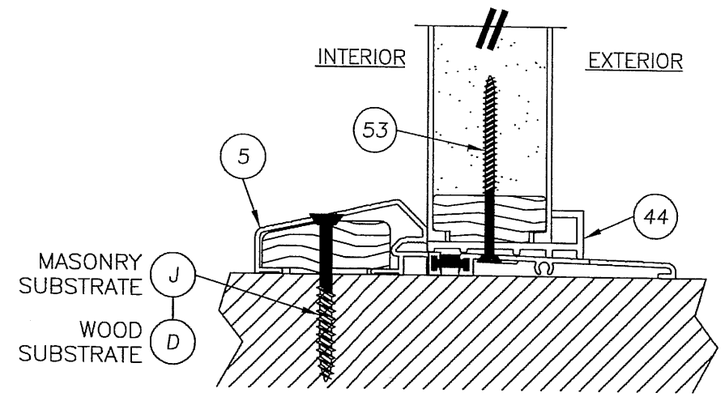

3/9 VERTICAL CROSS SECTION

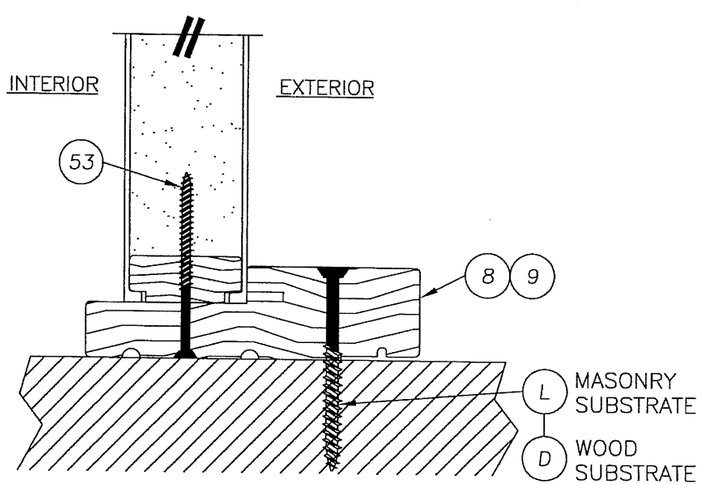

4/9 VERTICAL CROSS SECTION

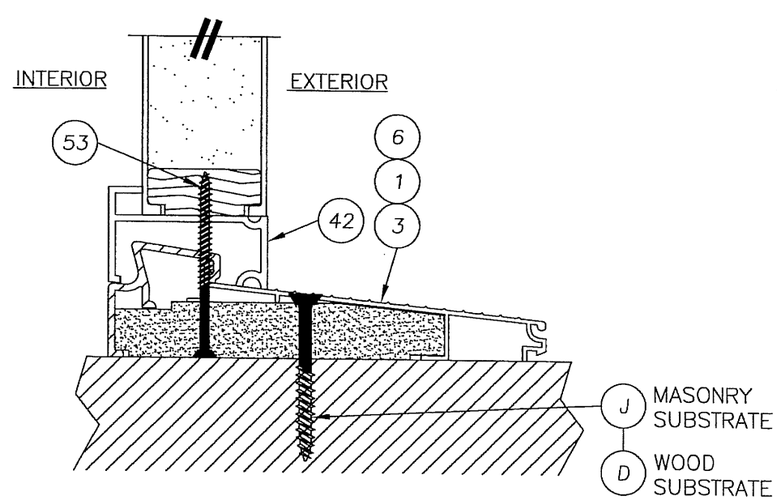

5/9 VERTICAL CROSS SECTION

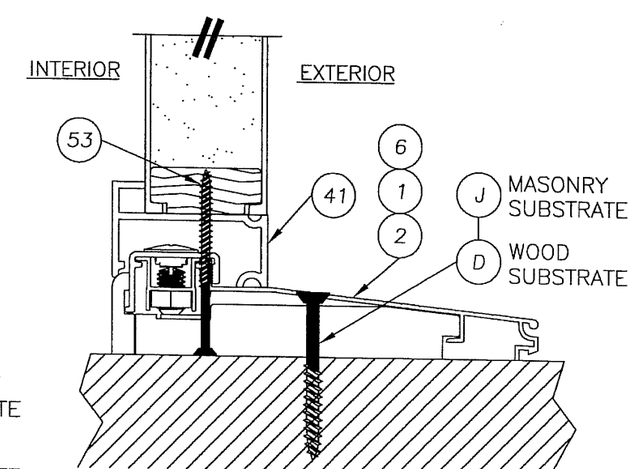

6/9 VERTICAL CROSS SECTION

Documents Prepared By:
R.W. BUILDING CONSULTANTS, INC.
P.O. Box 230 Valrico FL. 33595
Phone No.: 813.659.9197
Florida Board of Professional Engineers
Certificate Of Authorization No. 9813
Wendell W. Haney, P.E. No. 54158
2-14-07

PRODUCT: SINGLE OPAQUE FIBERGLASS DOOR W/SIDELITE "IMPACT" INSWING / OUTSWING

PART OR ASSEMBLY: VERTICAL CROSS SECTIONS

NO.	DATE	BY

REVISIONS

DATE: 12/15/06
SCALE: N.T.S.
DWG. BY: AEM
CHK. BY: WWH
DRAWING NO.: TX-3167
SHEET 9 OF 12

© 2006 R.W. BUILDING CONSULTANTS INC.

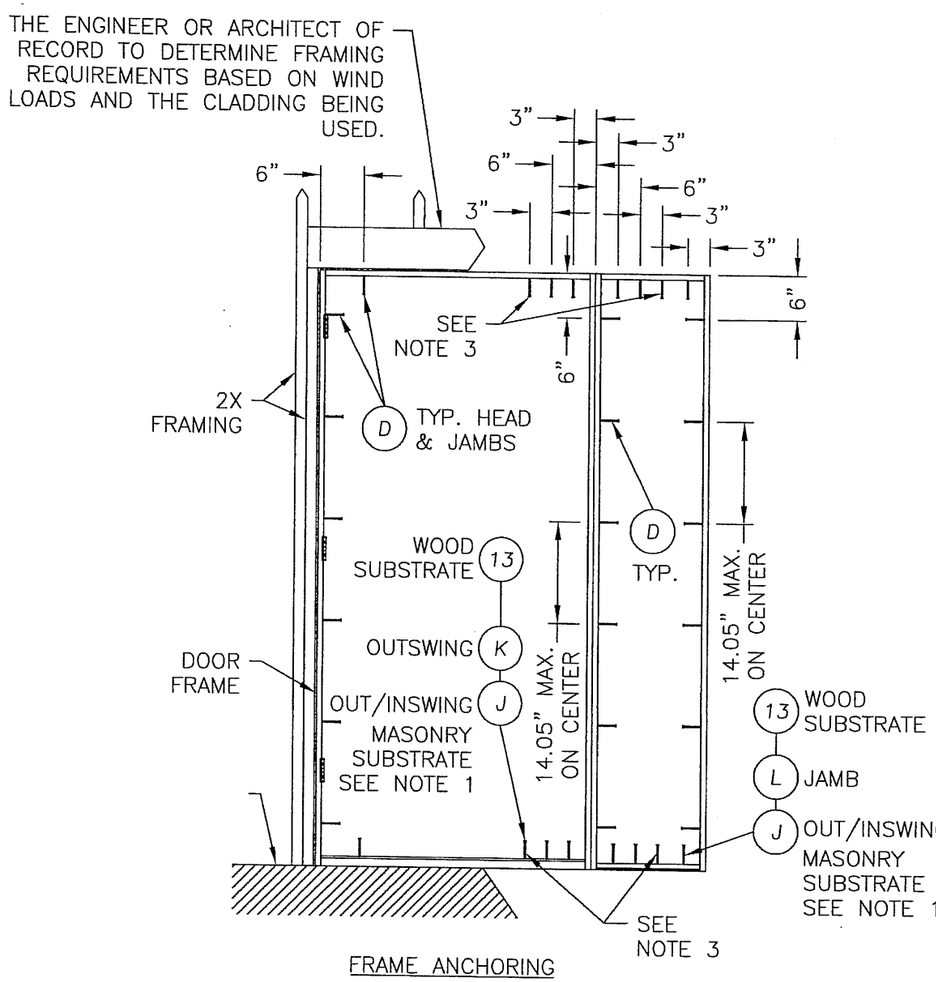

FRAME ANCHORING

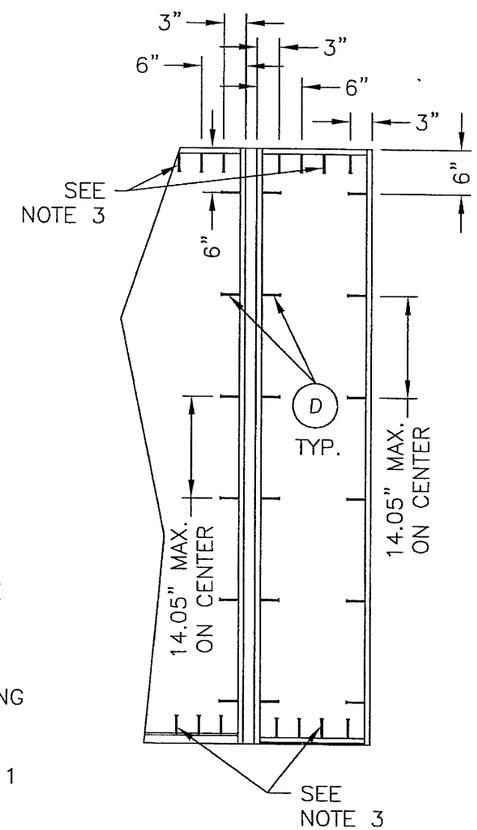

FRAME ANCHORING
INSWING

FOR INSWING UNITS, THE DOOR FRAME AND SIDELITE FRAME ARE BOTH ANCHORED TO THE 2X MULLION REINFORCEMENT.

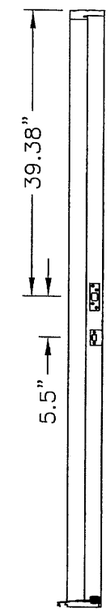

STRIKE PLATE LOCATIONS

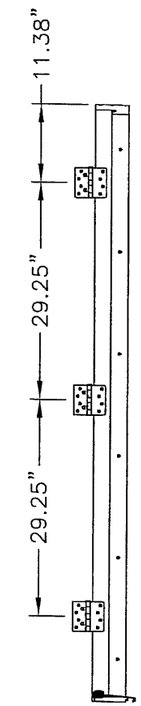

HINGE LOCATIONS

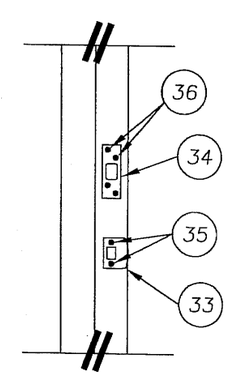

STRIKE PLATE DETAIL

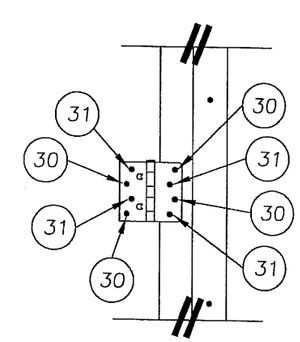

HINGE DETAIL

NOTES:

1. 1/4" ITW CONCRETE SCREWS ANCHORING FRAME AND/OR SILL REQUIRE A MINIMUM 2-1/2" CLEARANCE TO MASONRY EDGES AND A MINIMUM 3" CLEARANCE TO ADJACENT CONCRETE SCREWS UNLESS OTHERWISE NOTED BY CONCRETE SCREW MANUFACTURER.

3. THESE SCREWS ARE REQUIRED ONLY WHEN THE DP EXCEEDS 50 PSF.

Documents Prepared By:
RW BUILDING CONSULTANTS, INC.
P.O. Box 230 Valrico FL. 33595
Phone No.: 813.659.9197
Florida Board of Professional Engineers
Certificate Of Authorization No. 9813
Wendell W. Haney, P.E. No. 54158

PRODUCT: SINGLE OPAQUE FIBERGLASS DOOR W/SIDELITE "IMPACT" INSWING / OUTSWING

PART OR ASSEMBLY: FRAME ANCHORING

NO.	DATE	REVISIONS	BY

DATE: 12/15/06
SCALE: N.T.S.
DWG. BY: AEM
CHK. BY: WWH
DRAWING NO.: TX-3167
SHEET 10 OF 12

© 2006 R.W. BUILDING CONSULTANTS INC.

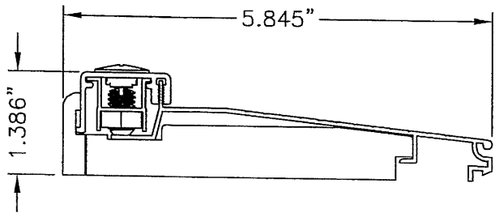

2 THRESHOLD
INSWING ADJUSTABLE

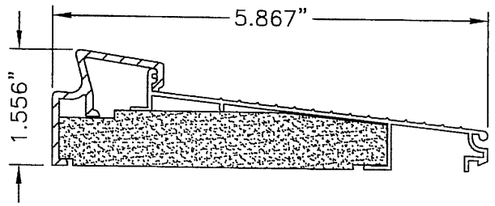

3 THRESHOLD
INSWING SELF-ADJUST

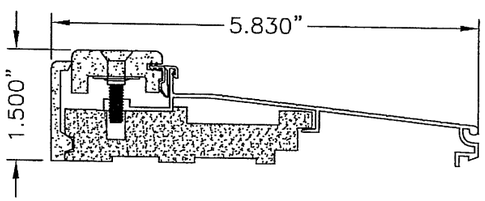

6 THRESHOLD
INSWING
MAX. DP RATING = +/- 50.0 PSF

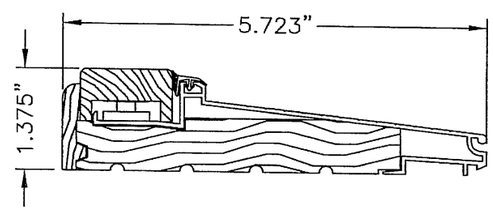

1 THRESHOLD
INSWING ADJUSTABLE

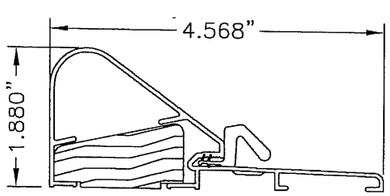

4 THRESHOLD
OUTSWING COASTAL

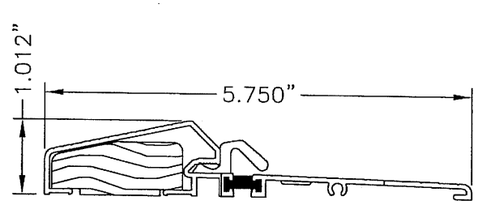

5 THRESHOLD
OUTSWING STANDARD

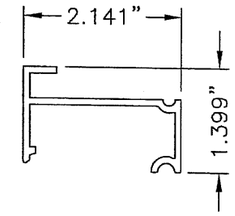

41 INSWING SIDELITE
SPACER

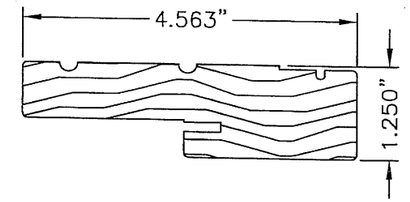

9 8 JAMB

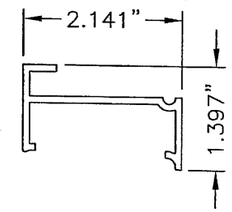

40 INSWING SIDELITE
SPACER

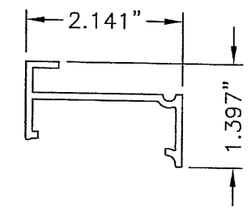

43 INSWING SIDELITE
SPACER

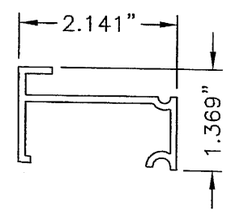

42 INSWING SIDELITE
SPACER

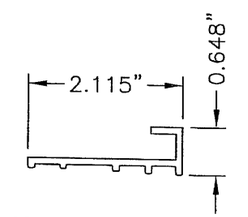

44 OUTSWING SIDELITE
SPACER

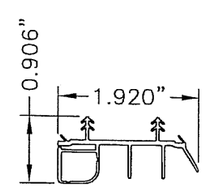

7 SWEEP

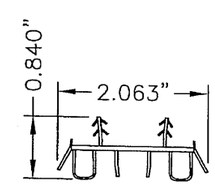

52 SWEEP

Documents Prepared By:
R W BUILDING CONSULTANTS, INC.
P.O. Box 230 Valrico FL. 33595
Phone No.: 813.659.9197
Florida Board of Professional Engineers
Certificate Of Authorization No. 9813
Wendell W. Haney, P.E. No. 54158
12-14-06

PRODUCT: SINGLE OPAQUE FIBERGLASS DOOR W/SIDELITE "IMPACT" INSWING / OUTSWING

PART OR ASSEMBLY: COMPONENTS

NO.	DATE	BY

REVISIONS

DATE: 12/15/06
SCALE: N.T.S.
DWG. BY: AEM
CHK. BY: WWH
DRAWING NO.: TX-3167
SHEET 11 OF 12

© 2006 R.W. BUILDING CONSULTANTS INC.

BILL OF MATERIALS

ITEM	DESCRIPTION	MATERIAL
B	2X FRAMING	WOOD
C	1/4" MAX. SHIM SPACE	WOOD
D	#10 X 2-1/2" PFH WOOD SCREW	STEEL
G	KWIKSET 200 SERIES PASSAGE LOCK	STEEL
H	KWIKSET 600 SERIES DEADBOLT	STEEL
I	1/4" X 3-3/4" ITW TAPCON	STEEL
J	1/4" X 2-1/4" ITW TAPCON	STEEL
K	1/4" X 1-3/4" ITW TAPCON	STEEL
L	1/4" X 2-3/4" ITW TAPCON	STEEL
O	2X MULLION	WOOD
1	INSWING ADJUSTABLE THRESHOLD (IS300AJ)	ALUM./WOOD
2	INSWING THRESHOLD (IS300HP5)	–
3	INSWING SELF ADJUST THERMAL BREAK THRESHOLD (ISP30M)	ALUM./COMP.
4	OUTSWING COASTAL THRESHOLD	ALUM./WOOD
5	OUTSWING STANDARD THRESHOLD	ALUM./WOOD
6	INSWING THRESHOLD	–
7	DOOR BOTTOM SWEEP	VINYL
8	JAMB (PINE)	WOOD
9	JAMB (OAK)	WOOD
10	HINGE STILE (SMOOTH STAR)	WOOD
11	LOCK STILE (SMOOTH STAR)	LVL/WOOD
12	TOP RAIL (SMOOTH STAR)	PVC
13	BOTTOM RAIL (SMOOTH STAR)	PVC
14	PANEL REINFORCEMENT 0.023" THK. (SMOOTH STAR)	STEEL
15	DOOR SKIN 0.072" THK. (SMOOTH STAR) Fy = 6,000 PSI MIN.	FIBERGLASS
16	HINGE STILE (CLASSIC CRAFT)	WOOD/LVL
17	LOCK STILE (CLASSIC CRAFT)	WOOD/LVL
18	TOP RAIL (CLASSIC CRAFT)	PVC
19	BOTTOM RAIL (CLASSIC CRAFT)	PVC
20	PANEL REINFORCEMENT 0.023" THK. (CLASSIC CRAFT)	STEEL
21	DOOR SKIN 0.090" THK. (CLASSIC CRAFT) Fy = 6,000 PSI MIN.	FIBERGLASS
22	LOCK & HINGE STILE (CLASSIC CRAFT RUSTIC)	WOOD/LVL
23	TOP RAIL (CLASSIC CRAFT RUSTIC)	WOOD
24	BOTTOM RAIL (CLASSIC CRAFT RUSTIC)	PVC
25	PANEL REINFORCEMENT 0.023" THK. (CLASSIC CRAFT RUSTIC)	STEEL
26	DOOR SKIN 0.090" THK. (CC RUSTIC) Fy = 6,000 PSI MIN.	FIBERGLASS
27	FOAM CORE	POLYURETHANE
28	WEATHERSTRIP	FOAM
29	HINGE	STEEL
30	#10 X 2-1/2" PFH SCREW	STEEL
31	#10 X 3/4" PFH SCREW	STEEL
32	#9 X 3" PFH WOOD SCREW	STEEL
33	LATCH STRIKE PLATE	STEEL
34	SECURITY STRIKE PLATE (SINGLE DOOR ONLY)	STEEL
35	#8 X 3" PFH SCREW	STEEL
36	#8 X 3" PFH SCREW	STEEL

BILL OF MATERIALS

ITEM	DESCRIPTION	MATERIAL
40	INSWING SIDELITE SPACER FOR ADJUSTABLE THRESHOLD (DB14AJA)	PVC
41	INSWING SIDELITE SPACER FOR HP THRESHOLD (DB14HPA)	PVC
42	INSWING SIDELITE SPACER FOR SELF ADJUST THRESHOLD (DB14)	PVC
43	INSWING SIDELITE SPACER	PVC
44	OUTSWING SIDELITE SPACER	PVC
45	SIDELITE STILES & RAILS	WOOD
46	SIDELITE SKIN 0.070" THK. (SMOOTH STAR)	FIBERGLASS
47	SIDELITE SKIN 0.090" THK. (CLASSIC CRAFT)	FIBERGLASS
48	SIDELITE SKIN 0.070" THK. (FIBER CLASSIC)	FIBERGLASS
49	#6 X 1-3/4" PFH SCREW (LITE FRAME)	STEEL
50	LITE FRAME FIBER CLASSIC	PVC
51	LITE FRAME SMOOTH STAR	PVC
52	DOOR BOTTOM SWEEP	VINYL
53	#9 X 2-1/2" PFH WOOD SCREW	STEEL
54	3/4" INSULATED GLASS 1/8" TEMPERED – AIR – 1/8" TEMPERED	GLASS
55	1" INSULATED GLASS 1/8" TEMPERED – AIR – 1/8" TEMPERED	GLASS
56	1/2" INSULATED GLASS 1/8" TEMPERED – AIR – 1/8" TEMPERED	GLASS
57	GLAZING COMPOUND	SILICONE
58	SEALANT	SILICONE
59	#9 X 1" PPH SCREW (LITE FRAME)	STEEL
60	HINGE STILE (FIBER CLASSIC)	WOOD
61	LOCK STILE (FIBER CLASSIC)	LVL/WOOD
62	TOP RAIL (FIBER CLASSIC)	PVC
63	BOTTOM RAIL (FIBER CLASSIC)	PVC
64	PANEL REINFORCEMENT 0.023" THK. (FIBER CLASSIC)	STEEL
65	DOOR SKIN 0.072" THK. (FIBER CLASSIC) Fy = 6,000 PSI MIN.	FIBERGLASS

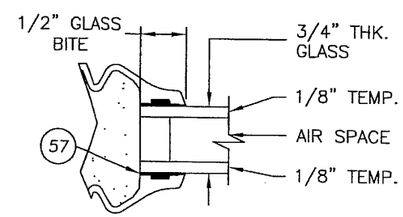

54 GLAZING DETAIL
3/4" INSULATED GLASS

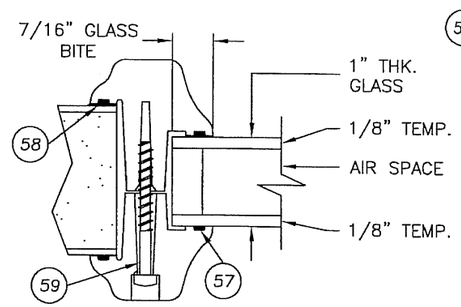

55 GLAZING DETAIL
1" INSULATED GLASS

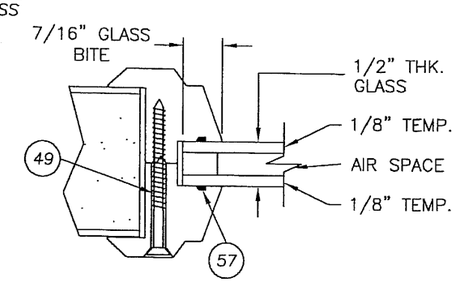

56 GLAZING DETAIL
1/2" INSULATED GLASS

Documents Prepared By:
RW BUILDING CONSULTANTS, INC.
P.O. Box 230 Valrico FL. 33595
Phone No.: 813.659.9197
Florida Board of Professional Engineers
Certificate Of Authorization No. 9813
Wendell W. Haney, P.E. No. 54158

PRODUCT: SINGLE OPAQUE FIBERGLASS DOOR W/SIDELITE "IMPACT" INSWING / OUTSWING

PART OR ASSEMBLY: BILL OF MATERIALS & GLAZING DETAILS

NO.	DATE	REVISIONS	BY

DATE: 12/15/06
SCALE: N.T.S.
DWG. BY: AEM
CHK. BY: WWH
DRAWING NO.: TX-3167
SHEET 12 OF 12

© 2006 R.W. BUILDING CONSULTANTS INC.

THERMA-TRU®

118 INDUSTRIAL DR., EDGERTON, OH 43517
TEL. (419)298-1740

SMOOTH STAR, FIBER CLASSIC, CLASSIC CRAFT & CLASSIC CRAFT RUSTIC

SINGLE "IMPACT" DOOR WITH "NON-IMPACT" SIDELITES INSWING / OUTSWING

EVALUATED FOR USE IN THE STATE OF TEXAS

THE THERMA-TRU FIBERGLASS DOOR DESCRIBED HEREIN COMPLIES WITH THE INTERNATIONAL RESIDENTIAL CODE (IRC), SECTIONS R301 & R613 AND THE INTERNATIONAL BUILDING CODE (IBC), SECTIONS 1714.5 1405.12, 1609, 2403 AND 2404 (INCLUDING TEXAS REVISIONS) SUBJECT TO THE FOLLOWING CONDITIONS:

1. Anchors shall be as listed and spaced as shown in the details. Anchor embedment to base material shall be beyond wall dressing or stucco.
2. When used in wind borne debris regions (SEAWARD and INLAND I ZONES), the Product complies with Sections R301.2.1.2 and 1609.1.4 as an impact resistant product and does not require the use of an approved impact resistant covering. This product does not meet the requirements for enhanced protection of essential facilities as defined in ASTM E1996.
3. Allowable design pressure requirements must be equal to or less than the design pressure rating shown in the design pressure chart, sheet 1 of this drawing.
4. Conditions not covered by this drawing are subject to further engineering analysis.

SUPPORTING DOCUMENTS & EVIDENCE

1. Testing per TAS 201-94, TAS 202-94 and TAS 203-94 as performed by Testing Evaluation Laboratories Inc. and reported in test report number TEL 06-1031-1 Revised, dated February 14, 2007 and signed by Wendell W. Haney, P.E.
2. Testing per TAS 201-94, TAS 202-94 and TAS 203-94 as performed by Testing Evaluation Laboratories Inc. and reported in test report number TEL 06-1031-4, dated October 31, 2006 and signed by Wendell W. Haney, P.E.
3. Anchor analysis for loading conditions prepared, signed and sealed by Wendell W. Haney, P.E. Glass load resistance report ASTM E1300-00, prepared by Wendell W. Haney, P.E..
4. Certificate of Participation issued by the National Accreditation and Management Institute, Inc., certifying that Therma-Tru Corporation. is manufacturing products within a Quality Assurance program.

TABLE OF CONTENTS

SHEET #	DESCRIPTION
1	TYPICAL ELEVATIONS, DESIGN PRESSURES & GENERAL NOTES
2	DOOR PANEL DETAILS (SMOOTH STAR)
3	DOOR PANEL DETAILS (CLASSIC CRAFT)
4	DOOR PANEL DETAILS (CLASSIC CRAFT RUSTIC)
5	DOOR PANEL DETAILS (FIBER CLASSIC)
6	SIDELITE PANEL DETAILS
7	HORIZONTAL CROSS SECTIONS & GLAZING DETAILS
8	VERTICAL CROSS SECTIONS
9	VERTICAL CROSS SECTIONS
10	FRAME ANCHORING
11	COMPONENTS
12	BILL OF MATERIALS & GLAZING DETAILS

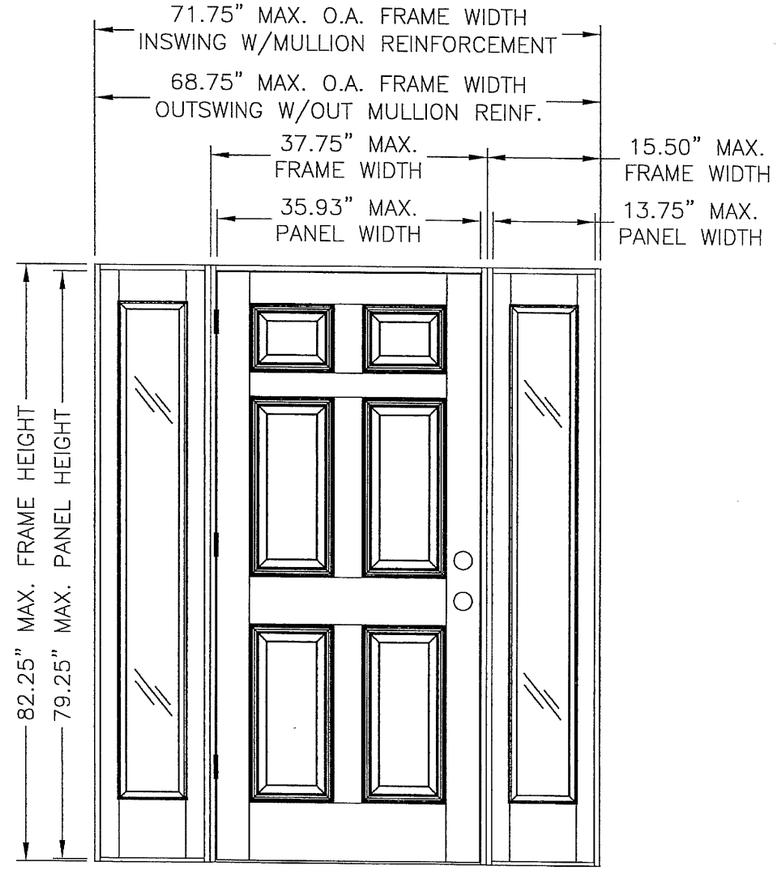

"SMOOTH STAR", "CLASSIC CRAFT", "CLASSIC CRAFT RUSTIC" & "FIBER CLASSIC"

OUTSWING UNIT SHOWN

DOOR TYPE	SWING	OVERALL FRAME DIMENSION	OVERALL SIDELITE D.L.O. DIMENSION	DESIGN PRESSURE	
				POSITIVE	NEGATIVE
CLASSIC CRAFT	OUTSWING	68.75" X 80.75"	7.09" X 63.09"	+65.0	-65.0
	INSWING	71.75" X 82.25"		+65.0	-65.0
FIBER CLASSIC	OUTSWING	68.75" X 80.75"		+65.0	-65.0
	INSWING	71.75" X 82.25"		+65.0	-65.0
SMOOTH STAR	OUTSWING	68.75" X 80.75"		+65.0	-65.0
	INSWING	71.75" X 82.25"		+65.0	-65.0
CLASSIC CRAFT RUSTIC	OUTSWING	68.75" X 80.75"		+65.0	-65.0
	INSWING	71.75" X 82.25"		+65.0	-65.0

Documents Prepared By:
R.W. BUILDING CONSULTANTS, INC.
P.O. Box 230 Valrico FL. 33595
Phone No.: 813.659.9197
Florida Board of Professional Engineers
Certificate Of Authorization No. 9813
Wendell W. Haney, P.E. No. 54158

2-14-07

PRODUCT: SINGLE OPAQUE FIBERGLASS DOOR W/SIDELITES "IMPACT" INSWING / OUTSWING

PART OR ASSEMBLY: TYPICAL ELEVATIONS, DESIGN PRESSURES & GENERAL NOTES

REVISIONS

NO.	DATE	BY

DATE: 12/15/06
SCALE: N.T.S.
DWG. BY: AEM
CHK. BY: WWH
DRAWING NO.: TX-3168
SHEET 1 OF 12

© 2006 R.W. BUILDING CONSULTANTS INC.

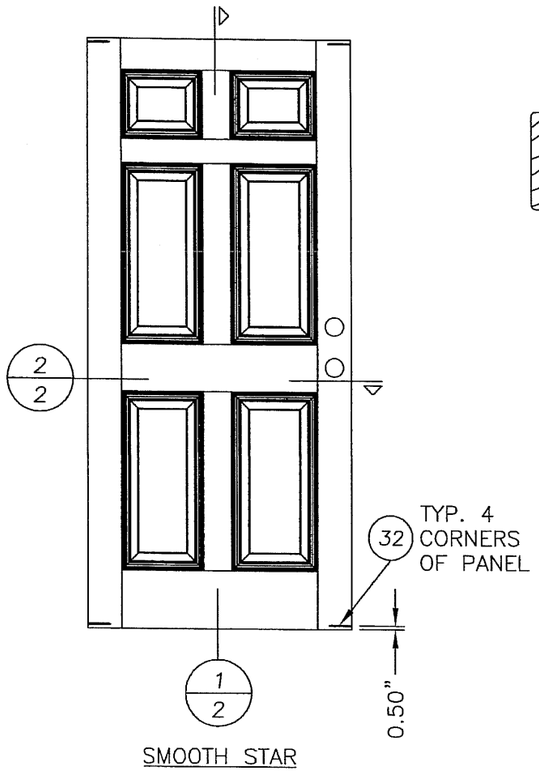

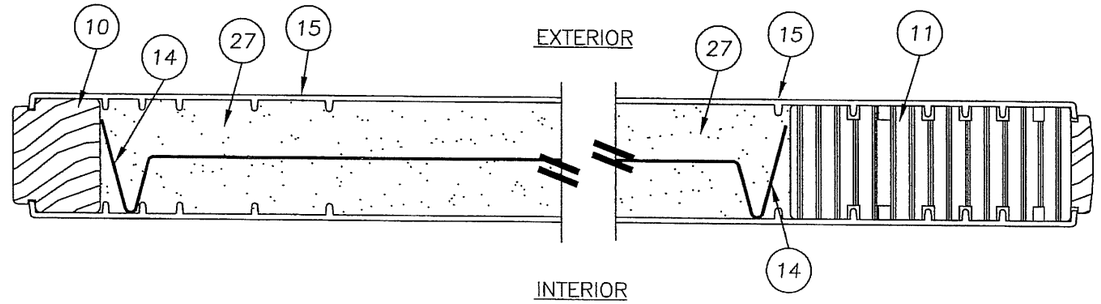

2/2 HORIZONTAL CROSS SECTION
SMOOTH STAR

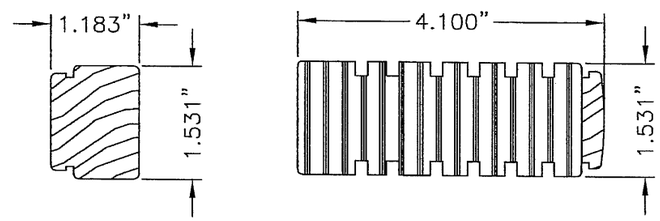

10 HINGE STILE
SMOOTH STAR

11 LOCK STILE
SMOOTH STAR

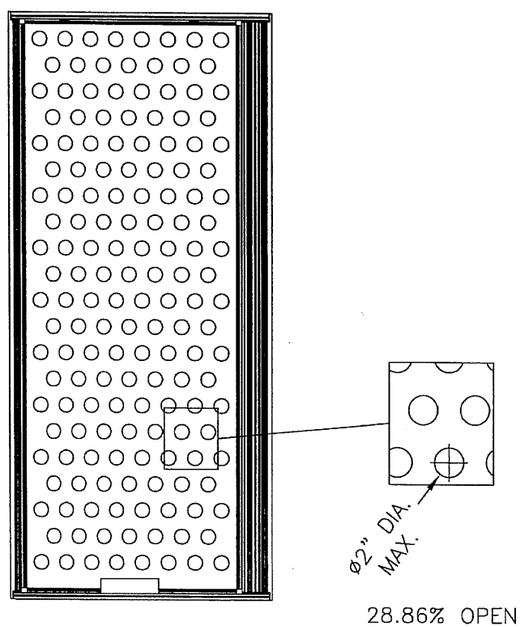

28.86% OPEN
AREA MAX.

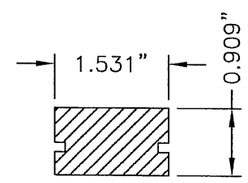

12 TOP RAIL
SMOOTH STAR

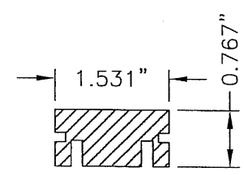

13 BOTTOM RAIL
SMOOTH STAR

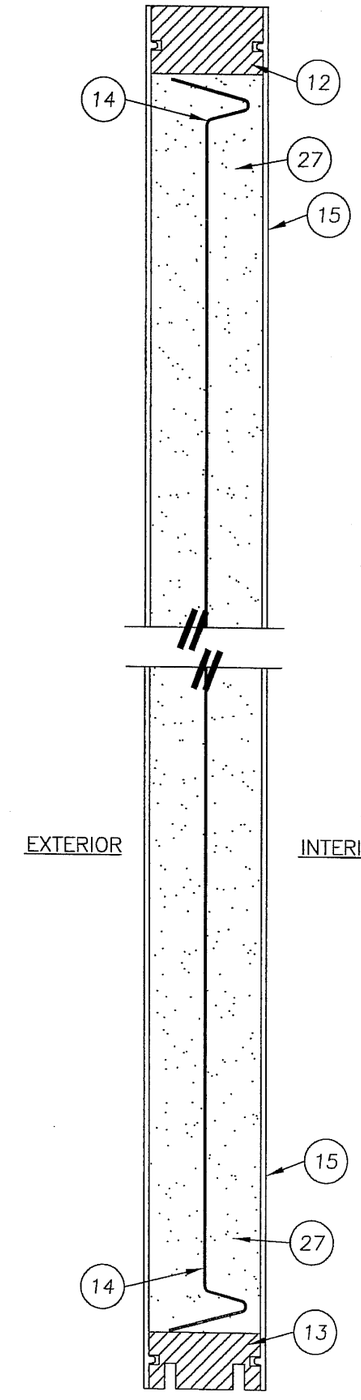

1/2 VERTICAL CROSS SECTION
SMOOTH STAR

Documents Prepared By:
R.W. BUILDING CONSULTANTS, INC.
P.O. Box 230 Valrico FL. 33595
Phone No.: 813.659.9197
Florida Board of Professional Engineers
Certificate Of Authorization No. 9813
Wendell W. Hanex, P.E. No. 54158
2-14-07

PRODUCT:
SINGLE OPAQUE
FIBERGLASS DOOR W/SIDELITES
"IMPACT" INSWING / OUTSWING

PART OR ASSEMBLY:
DOOR PANEL DETAILS
(SMOOTH STAR)

NO.	DATE	REVISIONS	BY

DATE: 12/15/06
SCALE: N.T.S.
DWG. BY: AEM
CHK. BY: WWH
DRAWING NO.: TX-3168
SHEET 2 OF 12

© 2006 R.W. BUILDING CONSULTANTS INC.

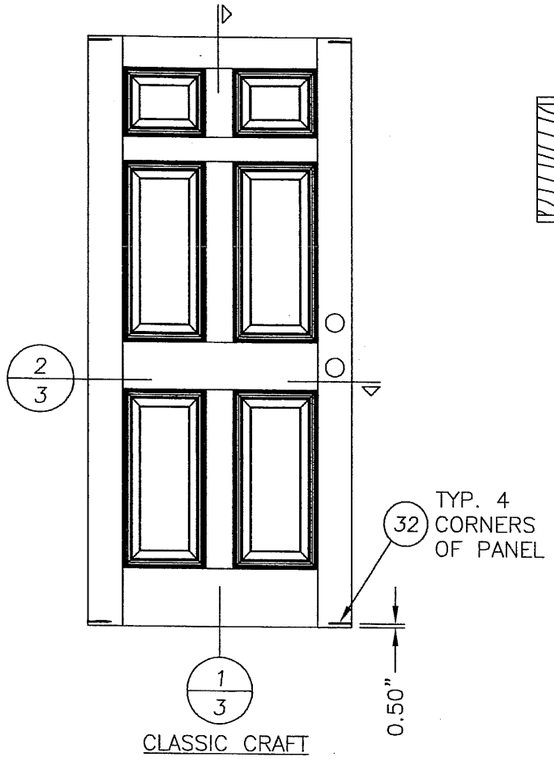

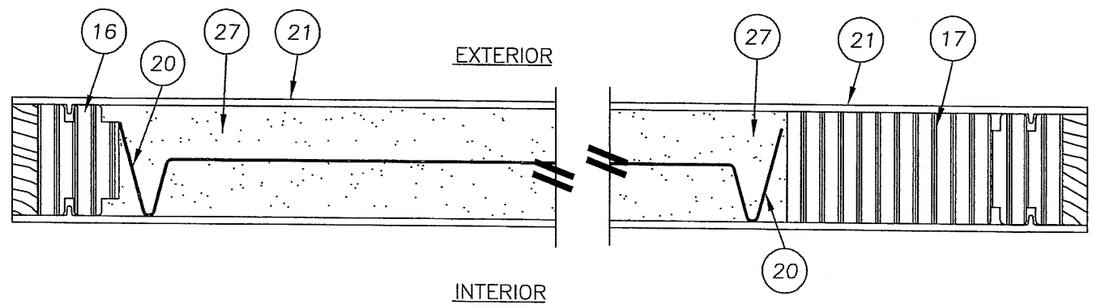

2/3 HORIZONTAL CROSS SECTION (CLASSIC CRAFT)

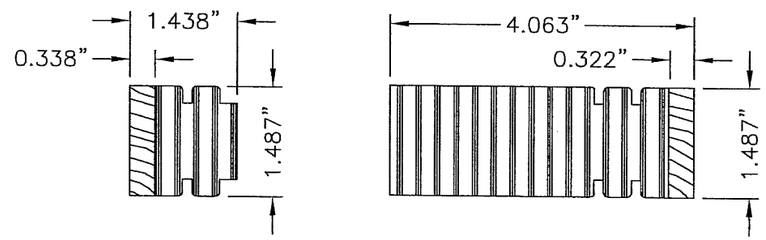

16 HINGE STILE CLASSIC CRAFT

17 LOCK STILE CLASSIC CRAFT

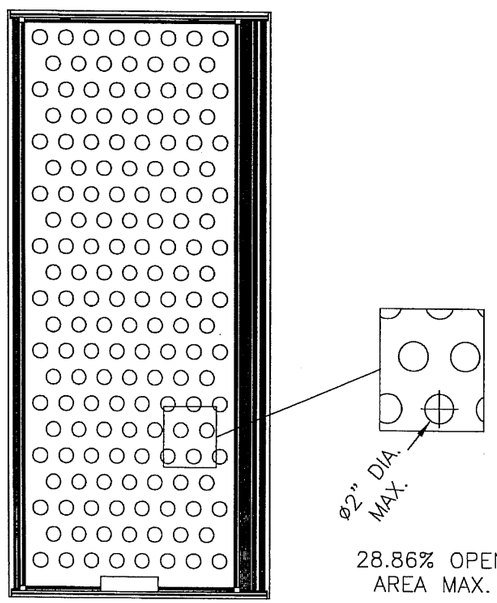

28.86% OPEN AREA MAX.

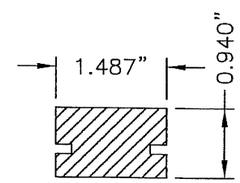

18 TOP RAIL CLASSIC CRAFT

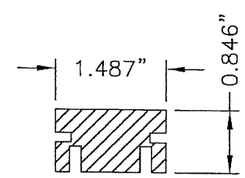

19 BOTTOM RAIL CLASSIC CRAFT

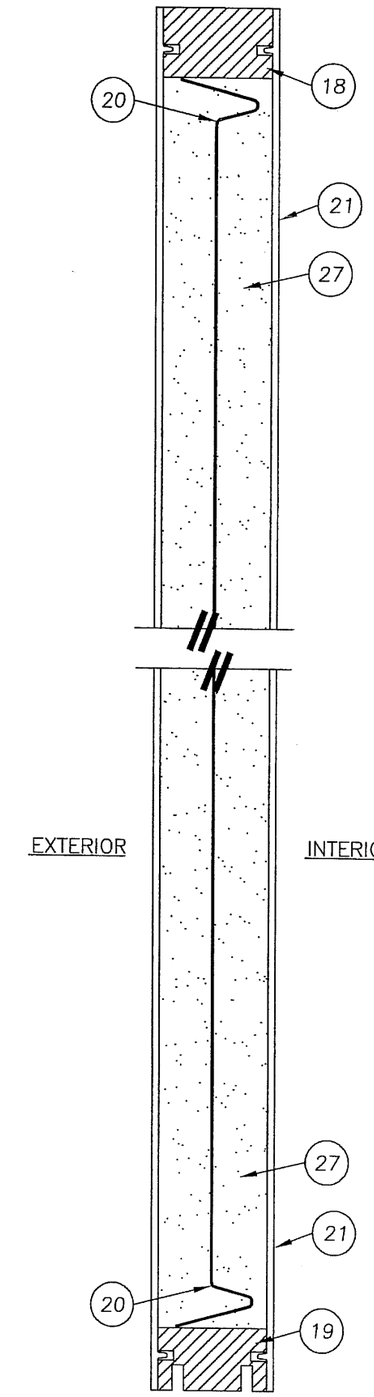

1/3 VERTICAL CROSS SECTION (CLASSIC CRAFT)

Documents Prepared By:
RW BUILDING CONSULTANTS, INC.
P.O. Box 230 Valrico FL. 33595
Phone No.: 813.659.9197
Florida Board of Professional Engineers
Certificate Of Authorization No. 9813
Wendell W. Harney P.E. No. 54158
2-14-07

PRODUCT: SINGLE OPAQUE FIBERGLASS DOOR W/SIDELITES "IMPACT" INSWING / OUTSWING

PART OR ASSEMBLY: DOOR PANEL DETAILS (CLASSIC CRAFT)

NO.	DATE	REVISIONS	BY

DATE: 12/15/06
SCALE: N.T.S.
DWG. BY: AEM
CHK. BY: WWH
DRAWING NO.: TX-3168
SHEET 3 OF 12

© 2006 R.W. BUILDING CONSULTANTS INC.

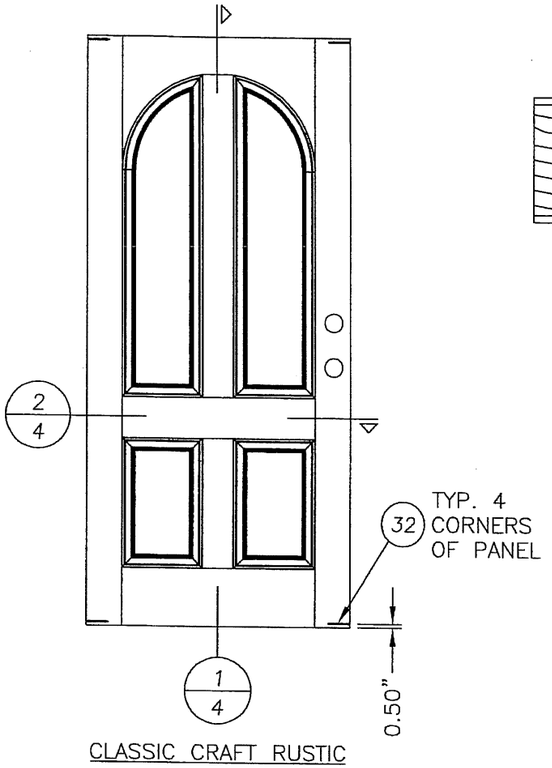

CLASSIC CRAFT RUSTIC

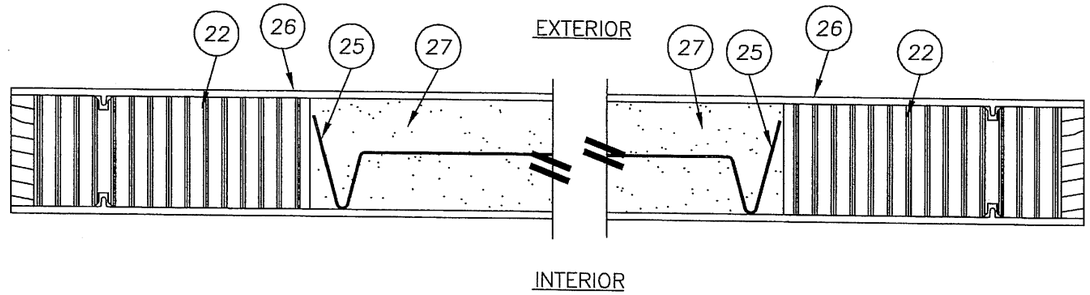

2/4 HORIZONTAL CROSS SECTION (CLASSIC CRAFT RUSTIC)

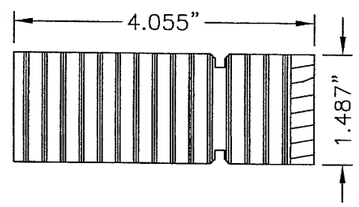

22 LOCK & HINGE STILE
CLASSIC CRAFT RUSTIC

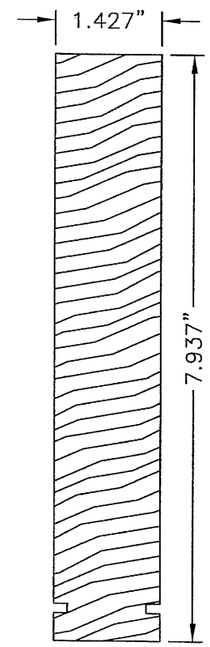

23 TOP RAIL
CLASSIC CRAFT RUSTIC

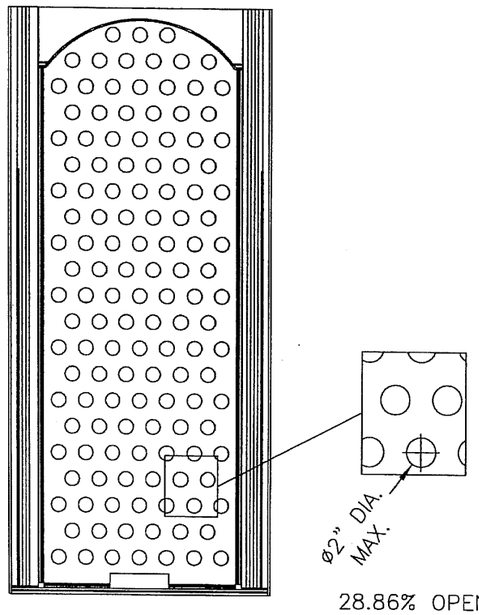

28.86% OPEN AREA MAX.

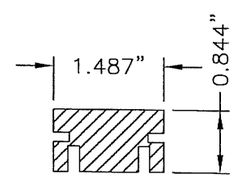

24 BOTTOM RAIL
CLASSIC CRAFT RUSTIC

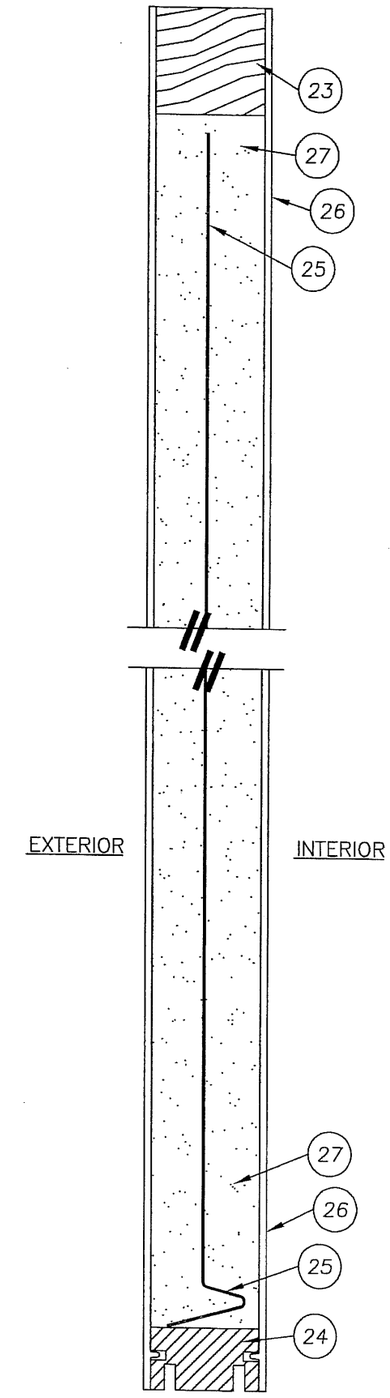

1/4 VERTICAL CROSS SECTION (CLASSIC CRAFT RUSTIC)

Documents Prepared By:
R.W. BUILDING CONSULTANTS, INC.
P.O. Box 230 Valrico FL. 33595
Phone No.: 813.659.9197
Florida Board of Professional Engineers
Certificate Of Authorization No. 9813
Wendell W. Hoxey, P.E. No. 54158
2-14-07

PRODUCT: SINGLE OPAQUE FIBERGLASS DOOR W/SIDELITES "IMPACT" INSWING / OUTSWING

PART OR ASSEMBLY: DOOR PANEL DETAILS (CLASSIC CRAFT RUSTIC)

NO.	DATE	REVISIONS	BY

DATE: 12/15/06
SCALE: N.T.S.
DWG. BY: AEM
CHK. BY: WWH
DRAWING NO.: TX-3168
SHEET 4 OF 12

© 2006 R.W. BUILDING CONSULTANTS INC.

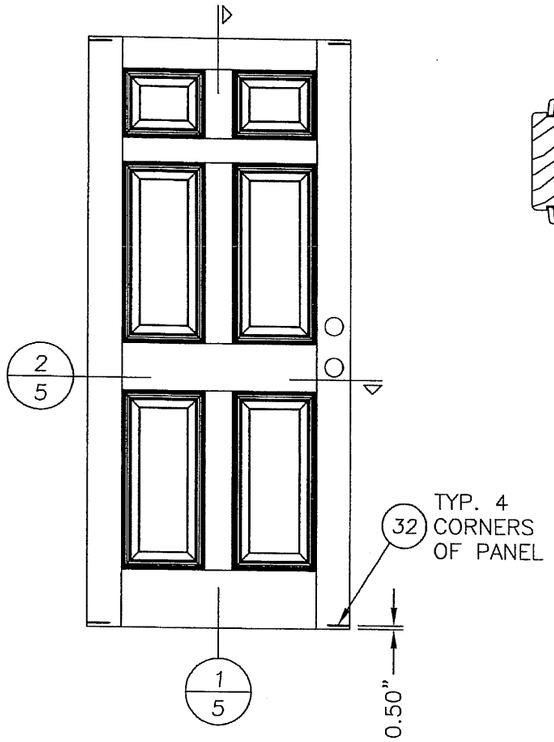

CLASSIC CRAFT

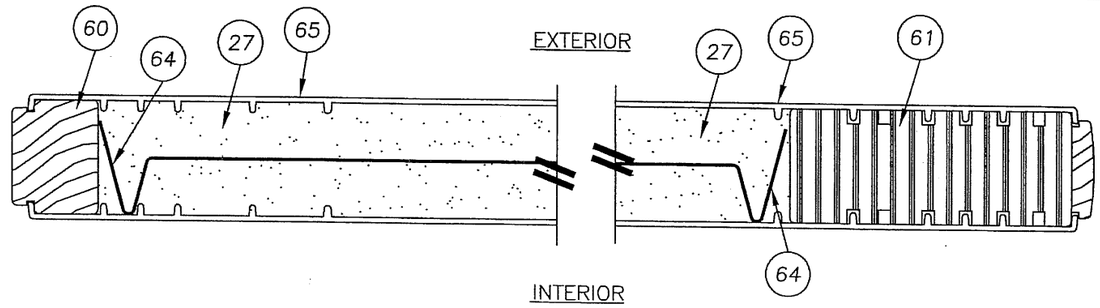

2/5 HORIZONTAL CROSS SECTION
FIBER CLASSIC

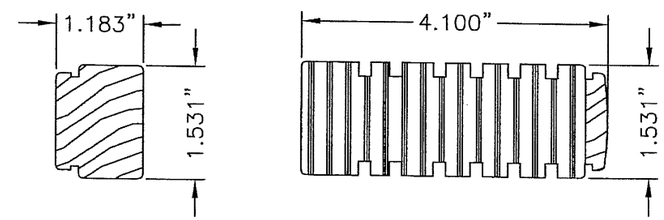

60 HINGE STILE
FIBER CLASSIC

61 LOCK STILE
FIBER CLASSIC

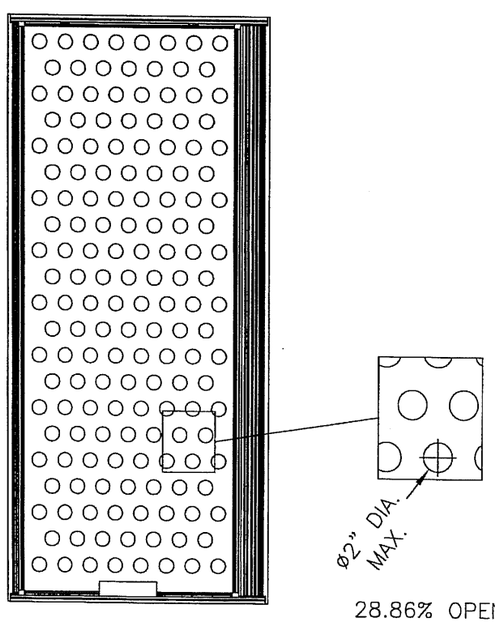

28.86% OPEN
AREA MAX.

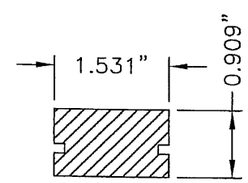

62 TOP RAIL
FIBER CLASSIC

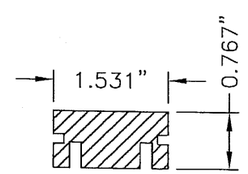

63 BOTTOM RAIL
FIBER CLASSIC

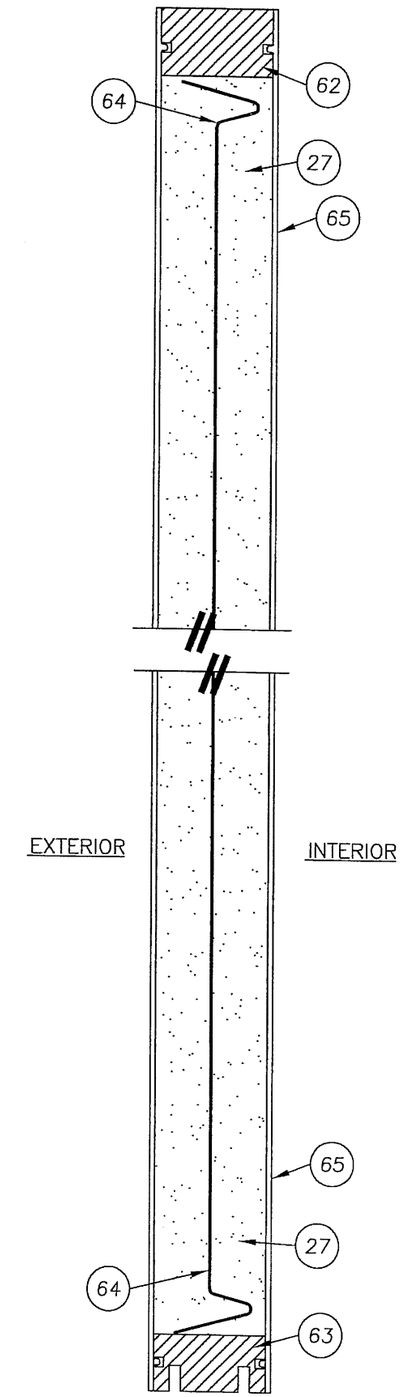

1/5 VERTICAL CROSS SECTION
FIBER CLASSIC

Documents Prepared By:
R W BUILDING CONSULTANTS, INC.
P.O. Box 230 Valrico FL. 33595
Phone No.: 813.659.9197
Florida Board of Professional Engineers
Certificate Of Authorization No. 9813
Wendell W. Harley, P.E. No. 54158

2-14-07

PRODUCT: SINGLE OPAQUE FIBERGLASS DOOR W/SIDELITES "IMPACT" INSWING / OUTSWING

PART OR ASSEMBLY: DOOR PANEL DETAILS (FIBER CLASSIC)

NO.	DATE	REVISIONS	BY

DATE: 12/15/06
SCALE: N.T.S.
DWG. BY: AEM
CHK. BY: WWH
DRAWING NO.: TX-3168
SHEET 5 OF 12

© 2006 R.W. BUILDING CONSULTANTS INC.

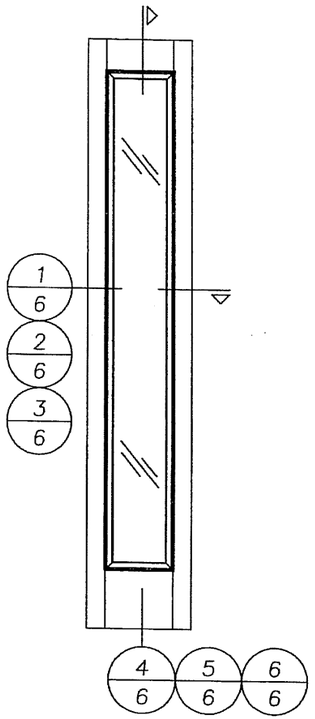

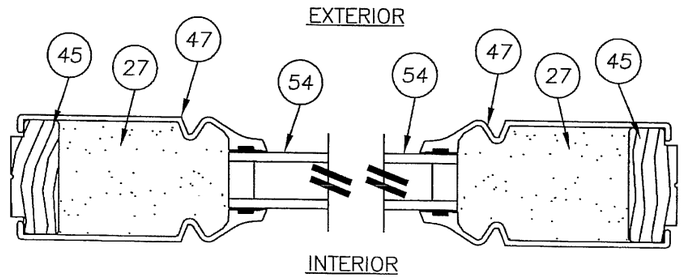

1/6 HORIZONTAL CROSS SECTION (CLASSIC CRAFT)

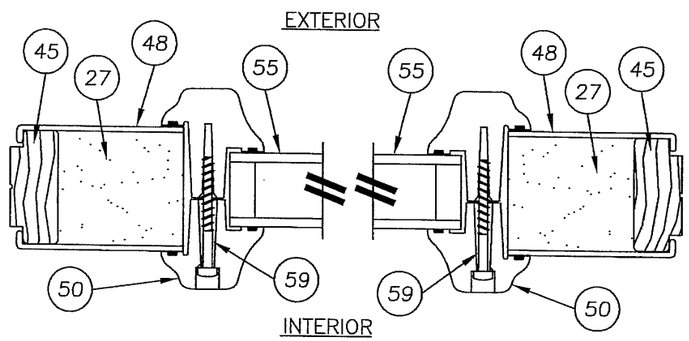

2/6 HORIZONTAL CROSS SECTION (FIBER CLASSIC)

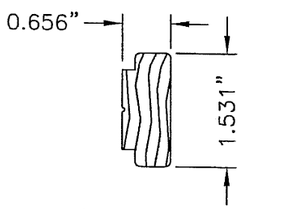

45 STILES & RAILS SIDELITE

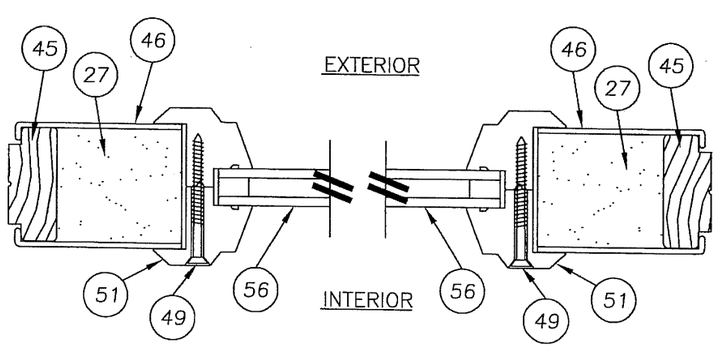

3/6 HORIZONTAL CROSS SECTION (SMOOTH STAR)

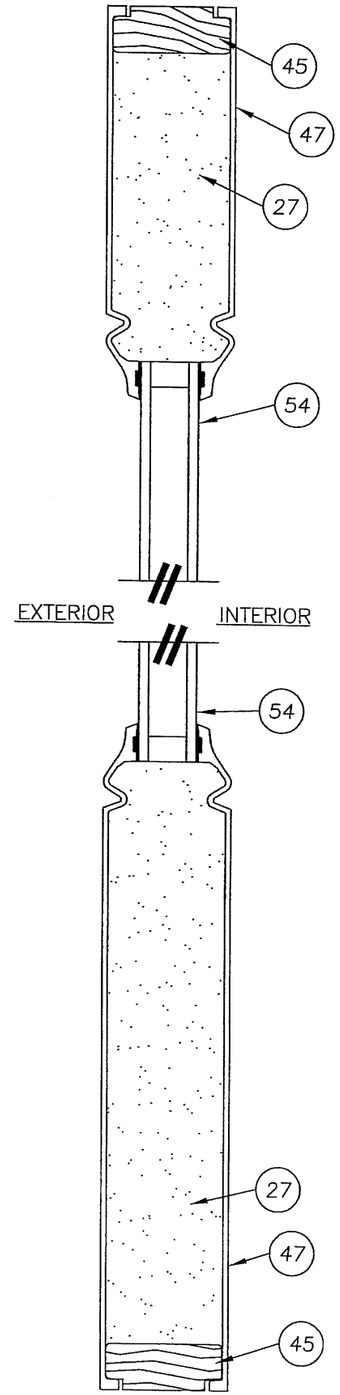

4/6 VERTICAL CROSS SECTION (CLASSIC CRAFT)

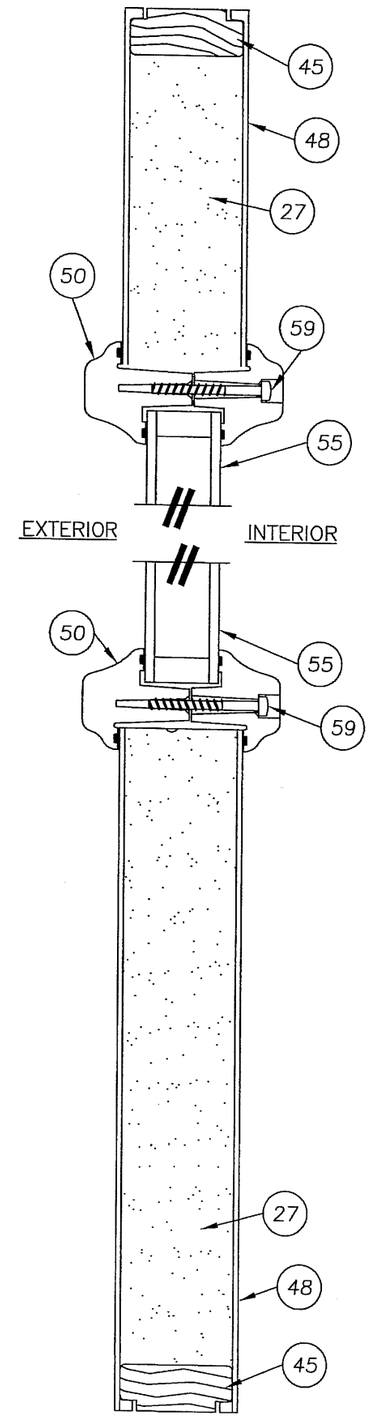

5/6 VERTICAL CROSS SECTION (FIBER CLASSIC)

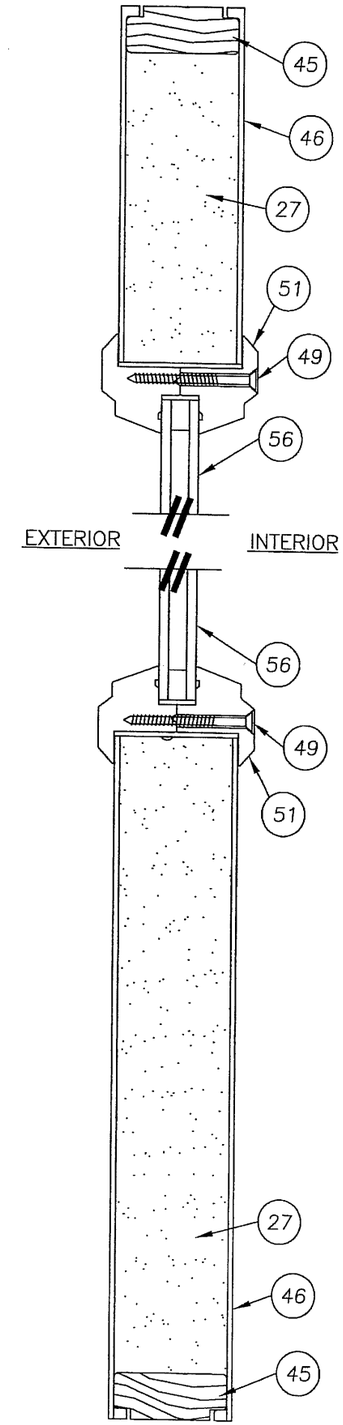

6/6 VERTICAL CROSS SECTION (SMOOTH STAR)

Documents Prepared By:
R.W. BUILDING CONSULTANTS, INC.
P.O. Box 230 Valrico FL. 33595
Phone No.: 813.659.9197
Florida Board of Professional Engineers
Certificate Of Authorization No. 9813
Wendell W. Haney, P.E. No. 54158
2-14-07

PRODUCT: SINGLE OPAQUE FIBERGLASS DOOR W/SIDELITES "IMPACT" INSWING/OUTSWING

PART OR ASSEMBLY: SIDELITE PANEL DETAILS

NO.	DATE	REVISIONS	BY

DATE: 12/15/06
SCALE: N.T.S.
DWG. BY: AEM
CHK. BY: WWH
DRAWING NO.: TX-3168
SHEET 6 OF 12

© 2006 R.W. BUILDING CONSULTANTS INC.

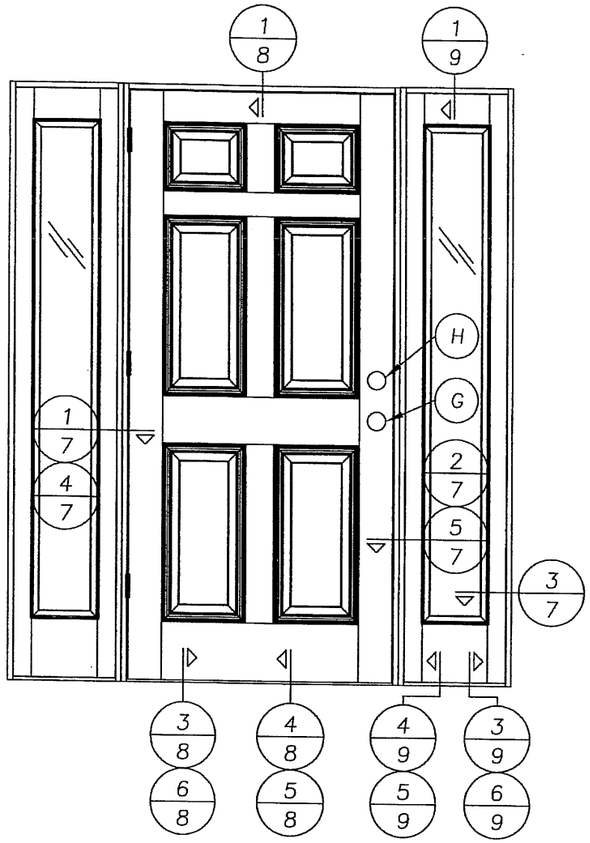

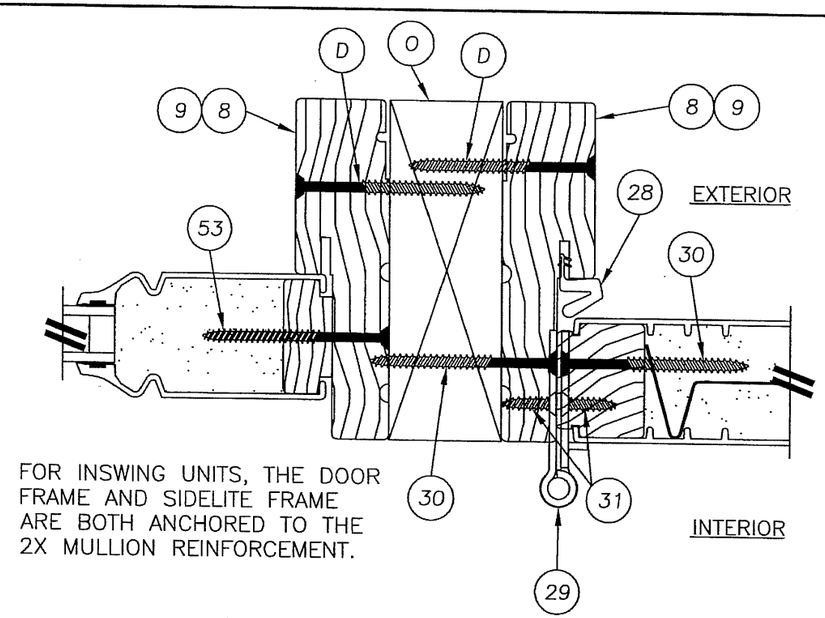

FOR INSWING UNITS, THE DOOR FRAME AND SIDELITE FRAME ARE BOTH ANCHORED TO THE 2X MULLION REINFORCEMENT.

4/7 HORIZONTAL CROSS SECTION
@ HINGE (INSWING)
SMOOTH STAR PANEL SHOWN
SEE DOOR PANEL DETAILS FOR
OPTIONAL PANEL TYPES

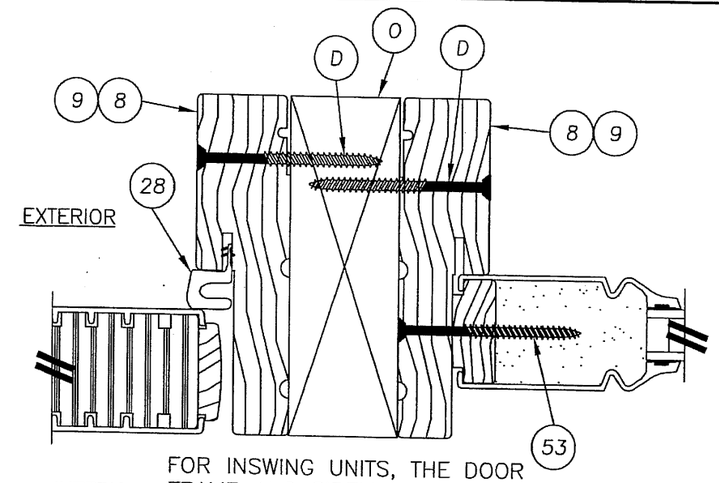

FOR INSWING UNITS, THE DOOR FRAME AND SIDELITE FRAME ARE BOTH ANCHORED TO THE 2X MULLION REINFORCEMENT.

5/7 HORIZONTAL CROSS SECTION
@ LATCH (INSWING)
SMOOTH STAR PANEL SHOWN
SEE DOOR PANEL DETAILS FOR
OPTIONAL PANEL TYPES

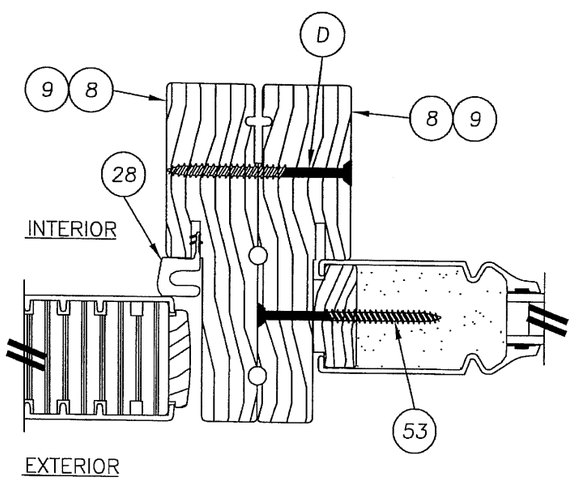

2/7 HORIZONTAL CROSS SECTION
@ LATCH (OUTSWING)
SMOOTH STAR PANEL SHOWN
SEE DOOR PANEL DETAILS FOR
OPTIONAL PANEL TYPES

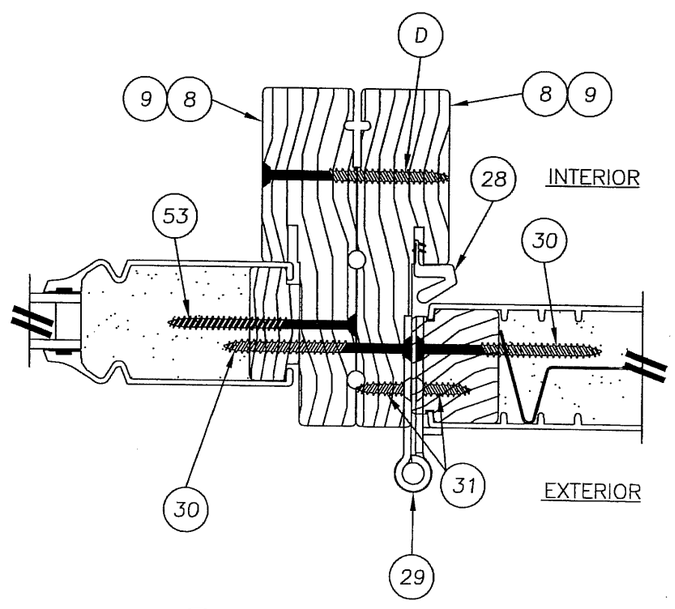

1/7 HORIZONTAL CROSS SECTION
@ HINGE (OUTSWING)
SMOOTH STAR PANEL SHOWN
SEE DOOR PANEL DETAILS FOR
OPTIONAL PANEL TYPES

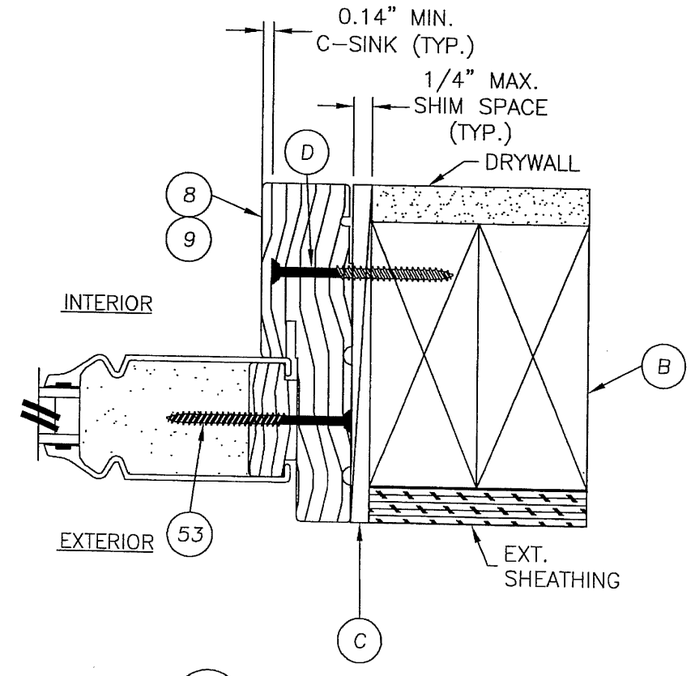

3/7 HORIZONTAL CROSS SECTION
@ SIDELITE (OUTSWING)
SMOOTH STAR PANEL SHOWN
SEE DOOR PANEL DETAILS FOR
OPTIONAL PANEL TYPES

Documents Prepared By:
R.W. BUILDING CONSULTANTS, INC.
P.O. Box 230 Valrico FL. 33595
Phone No.: 813.659.9197
Florida Board of Professional Engineers
Certificate Of Authorization No. 9813
Wendell W. Hayes, P.E. No. 54158

PRODUCT: SINGLE OPAQUE FIBERGLASS DOOR W/SIDELITES "IMPACT" INSWING / OUTSWING

PART OR ASSEMBLY: HORIZONTAL CROSS SECTIONS & GLAZING DETAILS

NO.	DATE	REVISIONS	BY

DATE: 12/15/06
SCALE: N.T.S.
DWG. BY: AEM
CHK. BY: WWH
DRAWING NO.: TX-3168
SHEET 7 OF 12

© 2006 R.W. BUILDING CONSULTANTS INC.

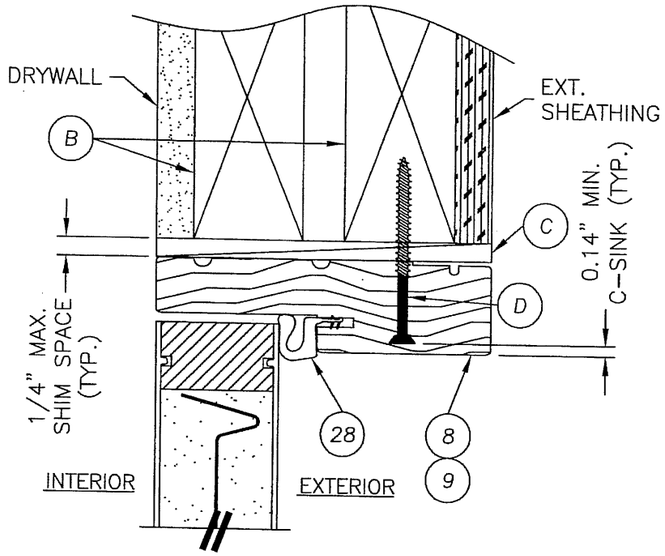

1/8 VERTICAL CROSS SECTION
@ HEAD
SMOOTH STAR PANEL SHOWN
SEE DOOR PANEL DETAILS FOR
OPTIONAL PANEL TYPES

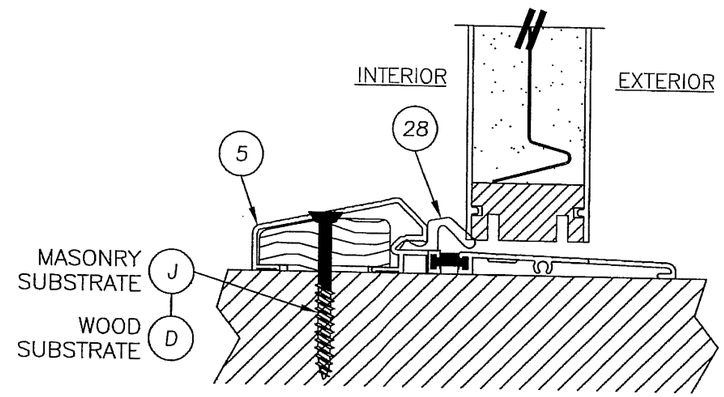

3/8 VERTICAL CROSS SECTION
@ THRESHOLD
SMOOTH STAR PANEL SHOWN
SEE DOOR PANEL DETAILS FOR
OPTIONAL PANEL TYPES

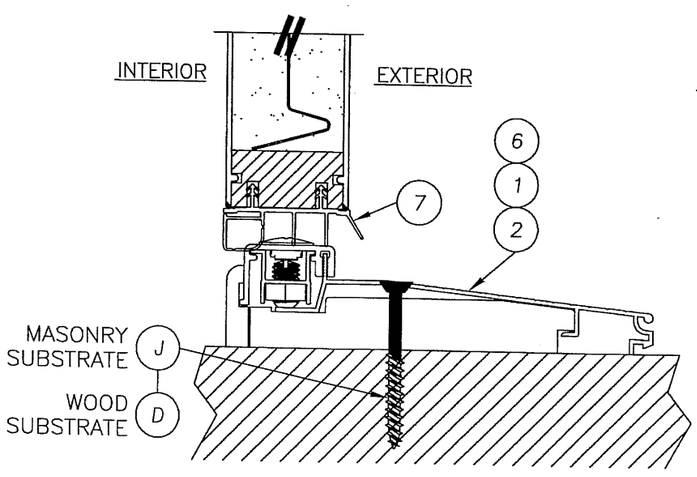

4/8 VERTICAL CROSS SECTION
@ THRESHOLD
SMOOTH STAR PANEL SHOWN
SEE DOOR PANEL DETAILS FOR
OPTIONAL PANEL TYPES

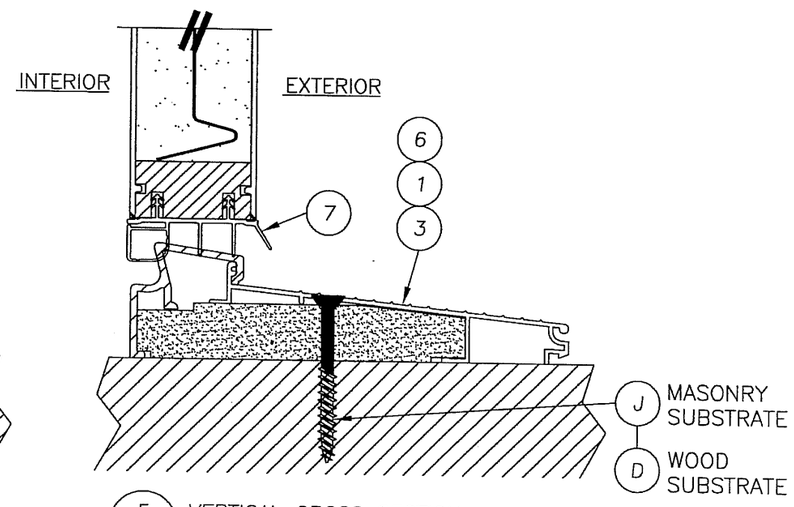

5/8 VERTICAL CROSS SECTION
@ THRESHOLD
SMOOTH STAR PANEL SHOWN
SEE DOOR PANEL DETAILS FOR
OPTIONAL PANEL TYPES

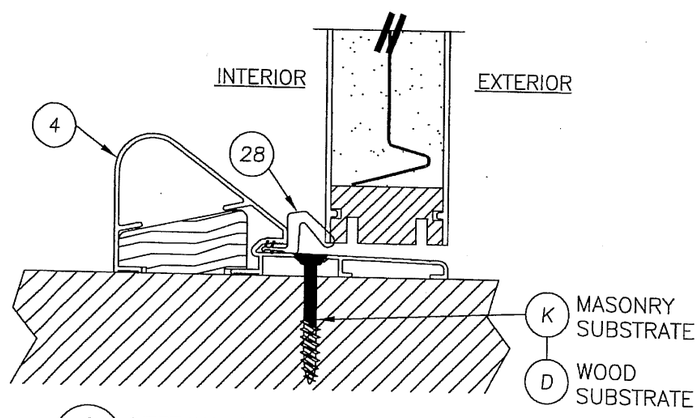

6/8 VERTICAL CROSS SECTION
@ THRESHOLD
SMOOTH STAR PANEL SHOWN
SEE DOOR PANEL DETAILS FOR
OPTIONAL PANEL TYPES

Documents Prepared By:
RW BUILDING CONSULTANTS, INC.
P.O. Box 230 Valrico FL. 33595
Phone No.: 813.659.9197
Florida Board of Professional Engineers
Certificate Of Authorization No. 9813
Wendell W. Harney, P.E. No. 54158

2-14-07

PRODUCT: SINGLE OPAQUE FIBERGLASS DOOR W/SIDELITES "IMPACT" INSWING / OUTSWING

PART OR ASSEMBLY: VERTICAL CROSS SECTIONS

NO.	DATE	BY

REVISIONS

DATE: 12/15/06
SCALE: N.T.S.
DWG. BY: AEM
CHK. BY: WWH
DRAWING NO.: TX-3168
SHEET 8 OF 12

© 2006 R.W. BUILDING CONSULTANTS INC.

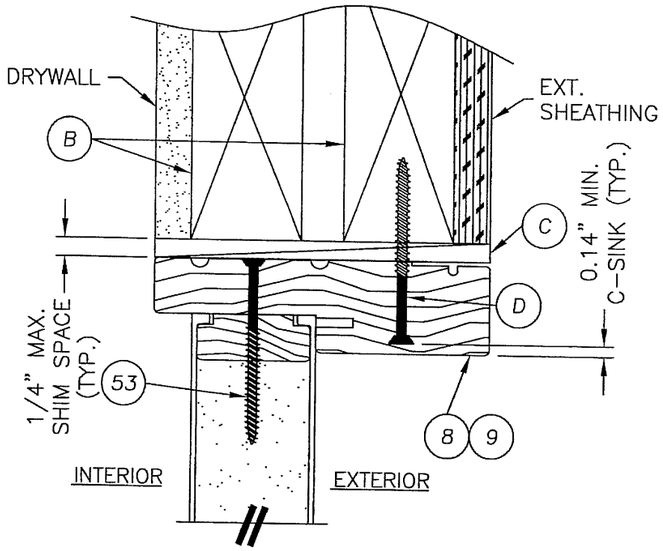

1/9 VERTICAL CROSS SECTION

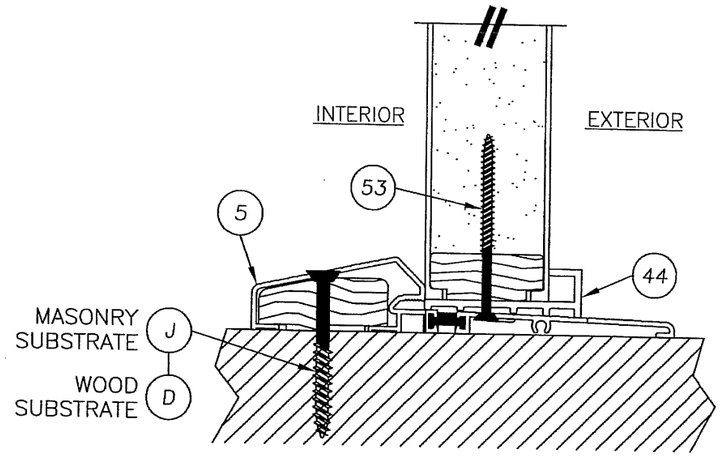

3/9 VERTICAL CROSS SECTION

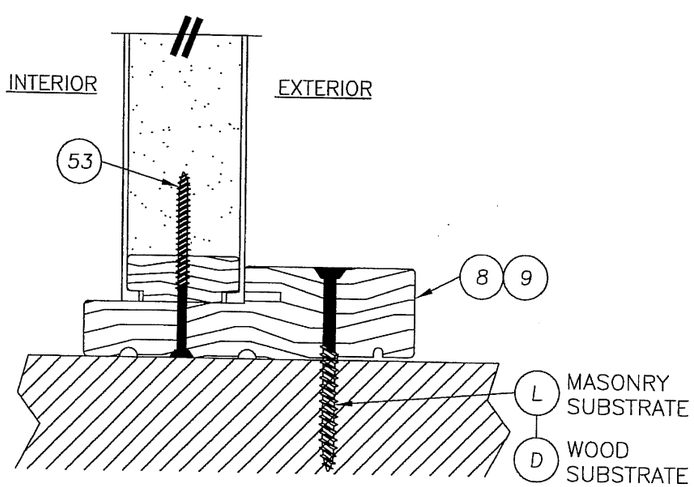

4/9 VERTICAL CROSS SECTION

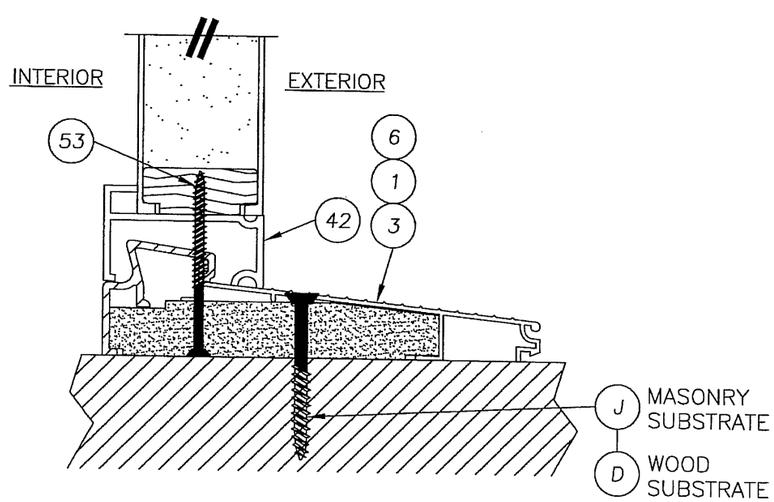

5/9 VERTICAL CROSS SECTION

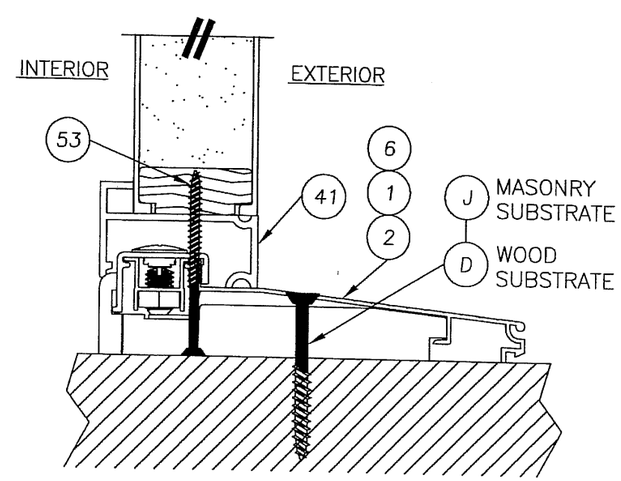

6/9 VERTICAL CROSS SECTION

Documents Prepared By:
R.W. BUILDING CONSULTANTS, INC.
P.O. Box 230 Valrico FL. 33595
Phone No.: 813.659.9197
Florida Board of Professional Engineers
Certificate Of Authorization No. 9813
Wendell W. Harvey, P.E. No. 54158
2-14-07

PRODUCT: SINGLE OPAQUE FIBERGLASS DOOR W/SIDELITES "IMPACT" INSWING / OUTSWING

PART OR ASSEMBLY: VERTICAL CROSS SECTIONS

NO.	DATE	REVISIONS	BY

DATE: 12/15/06
SCALE: N.T.S.
DWG. BY: AEM
CHK. BY: WWH
DRAWING NO.: TX-3168
SHEET 9 OF 12

© 2006 R.W. BUILDING CONSULTANTS INC.

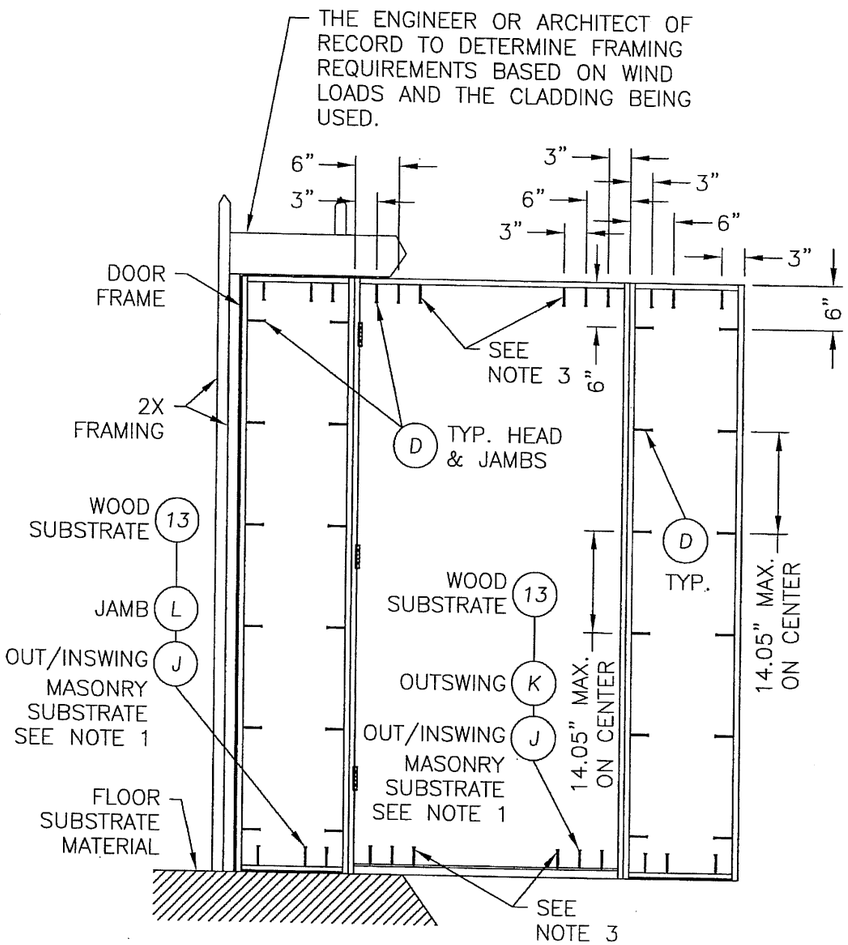

FRAME ANCHORING
OUTSWING ONLY

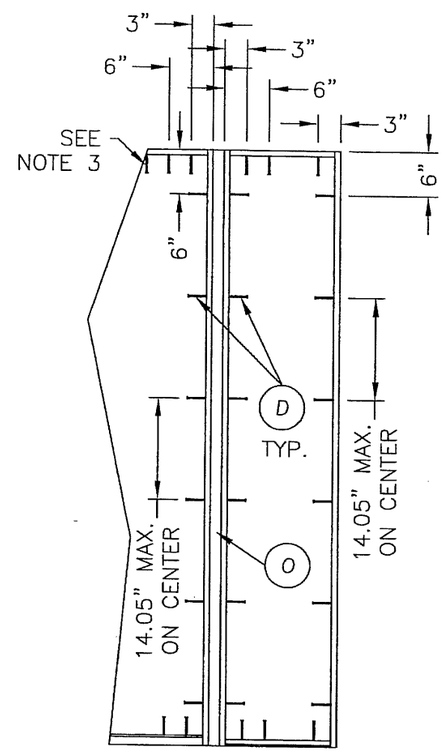

FRAME ANCHORING
INSWING

FOR INSWING UNITS, THE DOOR FRAME AND SIDELITE FRAME ARE BOTH ANCHORED TO THE 2X MULLION REINFORCEMENT.

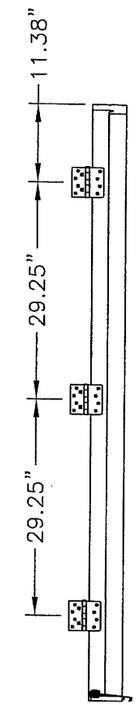

HINGE
LOCATIONS

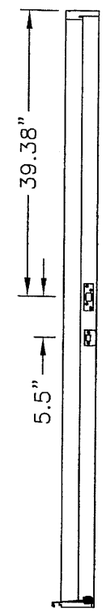

STRIKE PLATE
LOCATIONS

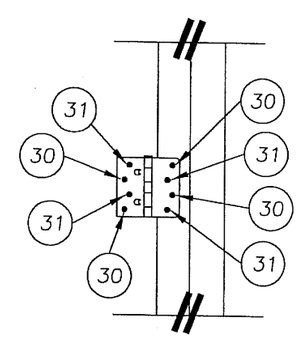

HINGE DETAIL

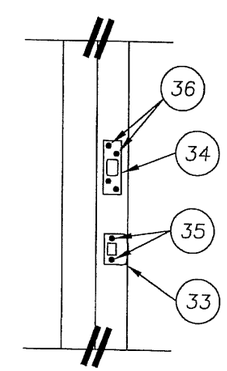

STRIKE PLATE DETAIL

NOTES:

1. 1/4" ITW CONCRETE SCREWS ANCHORING FRAME AND/OR SILL REQUIRE A MINIMUM 2-1/2" CLEARANCE TO MASONRY EDGES AND A MINIMUM 3" CLEARANCE TO ADJACENT CONCRETE SCREWS UNLESS OTHERWISE NOTED BY CONCRETE SCREW MANUFACTURER.

3. THESE SCREWS ARE REQUIRED ONLY WHEN THE DP EXCEEDS 63 PSF.

Documents Prepared By:
RW BUILDING CONSULTANTS, INC.
P.O. Box 230 Valrico FL. 33595
Phone No.: 813.659.9197
Florida Board of Professional Engineers
Certificate Of Authorization No. 9813
Wendell W. Haney, P.E. No. 54158

PRODUCT: SINGLE OPAQUE FIBERGLASS DOOR W/SIDELITES "IMPACT" INSWING / OUTSWING

PART OR ASSEMBLY: FRAME ANCHORING

NO.	DATE	REVISIONS	BY

DATE: 12/15/06
SCALE: N.T.S.
DWG. BY: AEM
CHK. BY: WWH
DRAWING NO.: TX-3168
SHEET 10 OF 12

© 2006 R.W. BUILDING CONSULTANTS INC.

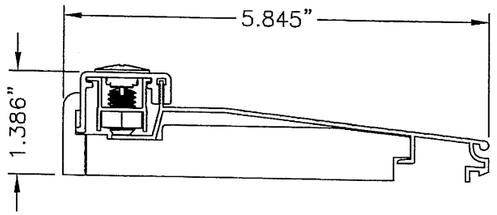

2 THRESHOLD
INSWING ADJUSTABLE

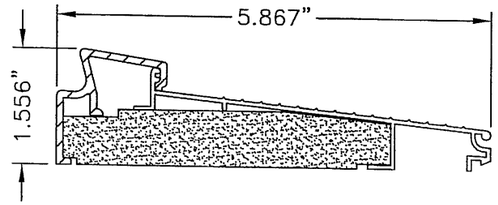

3 THRESHOLD
INSWING SELF–ADJUST

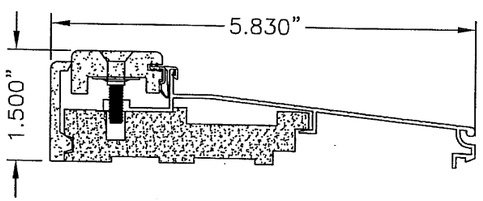

6 THRESHOLD
INSWING
MAX. DP RATING = +/– 50.0 PSF

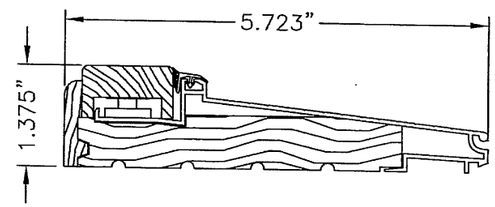

1 THRESHOLD
INSWING ADJUSTABLE

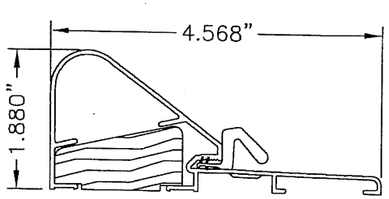

4 THRESHOLD
OUTSWING COASTAL

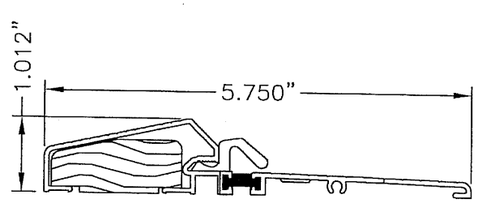

5 THRESHOLD
OUTSWING STANDARD

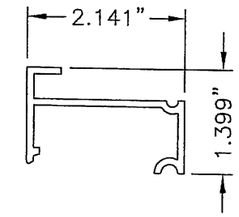

41 INSWING SIDELITE
SPACER

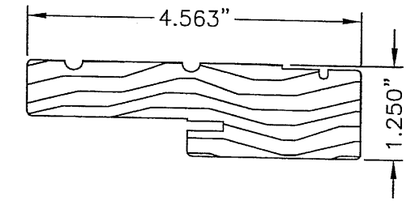

9 8 JAMB

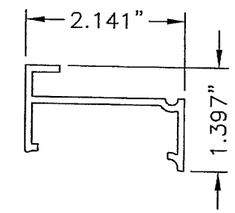

40 INSWING SIDELITE
SPACER

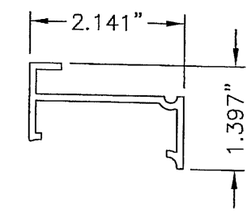

43 INSWING SIDELITE
SPACER

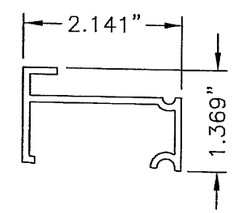

42 INSWING SIDELITE
SPACER

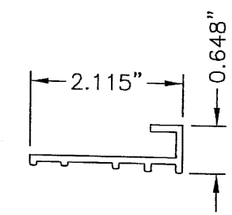

44 OUTSWING SIDELITE
SPACER

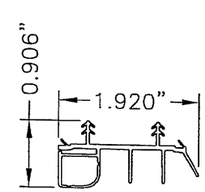

7 SWEEP

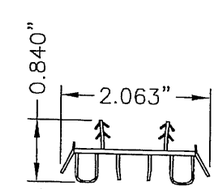

52 SWEEP

Documents Prepared By:
R.W. BUILDING CONSULTANTS, INC.
P.O. Box 230 Valrico FL. 33595
Phone No.: 813.659.9197
Florida Board of Professional Engineers
Certificate Of Authorization No. 9813
Wendell W. Haney, P.E. No. 54158
2-14-07

PRODUCT:
SINGLE OPAQUE
FIBERGLASS DOOR W/SIDELITES
"IMPACT" INSWING / OUTSWING

PART OR ASSEMBLY:
COMPONENTS

NO.	DATE	REVISIONS	BY

DATE: 12/15/06
SCALE: N.T.S.
DWG. BY: AEM
CHK. BY: WWH
DRAWING NO.: TX–3168
SHEET 11 OF 12

© 2006 R.W. BUILDING CONSULTANTS INC.

BILL OF MATERIALS

ITEM	DESCRIPTION	MATERIAL
B	2X FRAMING	WOOD
C	1/4" MAX. SHIM SPACE	WOOD
D	#10 X 2-1/2" PFH WOOD SCREW	STEEL
G	KWIKSET 200 SERIES PASSAGE LOCK	STEEL
H	KWIKSET 600 SERIES DEADBOLT	STEEL
I	1/4" X 3-3/4" ITW TAPCON	STEEL
J	1/4" X 2-1/4" ITW TAPCON	STEEL
K	1/4" X 1-3/4" ITW TAPCON	STEEL
L	1/4" X 2-3/4" ITW TAPCON	STEEL
O	2X MULLION	WOOD
1	INSWING ADJUSTABLE THRESHOLD (IS300AJ)	ALUM./WOOD
2	INSWING THRESHOLD (IS300HP5)	–
3	INSWING SELF ADJUST THERMAL BREAK THRESHOLD (ISP30M)	ALUM./COMP.
4	OUTSWING COASTAL THRESHOLD	ALUM./WOOD
5	OUTSWING STANDARD THRESHOLD	ALUM./WOOD
6	INSWING THRESHOLD	–
7	DOOR BOTTOM SWEEP	VINYL
8	JAMB (PINE)	WOOD
9	JAMB (OAK)	WOOD
10	HINGE STILE (SMOOTH STAR)	WOOD
11	LOCK STILE (SMOOTH STAR)	LVL/WOOD
12	TOP RAIL (SMOOTH STAR)	PVC
13	BOTTOM RAIL (SMOOTH STAR)	PVC
14	PANEL REINFORCEMENT 0.023" THK. (SMOOTH STAR)	STEEL
15	DOOR SKIN 0.072" THK. (SMOOTH STAR) Fy = 6,000 PSI MIN.	FIBERGLASS
16	HINGE STILE (CLASSIC CRAFT)	WOOD/LVL
17	LOCK STILE (CLASSIC CRAFT)	WOOD/LVL
18	TOP RAIL (CLASSIC CRAFT)	PVC
19	BOTTOM RAIL (CLASSIC CRAFT)	PVC
20	PANEL REINFORCEMENT 0.023" THK. (CLASSIC CRAFT)	STEEL
21	DOOR SKIN 0.090" THK. (CLASSIC CRAFT) Fy = 6,000 PSI MIN.	FIBERGLASS
22	LOCK & HINGE STILE (CLASSIC CRAFT RUSTIC)	WOOD/LVL
23	TOP RAIL (CLASSIC CRAFT RUSTIC)	WOOD
24	BOTTOM RAIL (CLASSIC CRAFT RUSTIC)	PVC
25	PANEL REINFORCEMENT 0.023" THK. (CLASSIC CRAFT RUSTIC)	STEEL
26	DOOR SKIN 0.090" THK. (CC RUSTIC) Fy = 6,000 PSI MIN.	FIBERGLASS
27	FOAM CORE	POLYURETHANE
28	WEATHERSTRIP	FOAM
29	HINGE	STEEL
30	#10 X 2-1/2" PFH SCREW	STEEL
31	#10 X 3/4" PFH SCREW	STEEL
32	#9 X 3" PFH WOOD SCREW	STEEL
33	LATCH STRIKE PLATE	STEEL
34	SECURITY STRIKE PLATE (SINGLE DOOR ONLY)	STEEL
35	#8 X 3" PFH SCREW	STEEL
36	#8 X 3" PFH SCREW	STEEL

BILL OF MATERIALS

ITEM	DESCRIPTION	MATERIAL
40	INSWING SIDELITE SPACER FOR ADJUSTABLE THRESHOLD (DB14AJA)	PVC
41	INSWING SIDELITE SPACER FOR HP THRESHOLD (DB14HPA)	PVC
42	INSWING SIDELITE SPACER FOR SELF ADJUST THRESHOLD (DB14)	PVC
43	INSWING SIDELITE SPACER	PVC
44	OUTSWING SIDELITE SPACER	PVC
45	SIDELITE STILES & RAILS	WOOD
46	SIDELITE SKIN 0.070" THK. (SMOOTH STAR)	FIBERGLASS
47	SIDELITE SKIN 0.090" THK. (CLASSIC CRAFT)	FIBERGLASS
48	SIDELITE SKIN 0.070" THK. (FIBER CLASSIC)	FIBERGLASS
49	#6 X 1-3/4" PFH SCREW (LITE FRAME)	STEEL
50	LITE FRAME FIBER CLASSIC	PVC
51	LITE FRAME SMOOTH STAR	PVC
52	DOOR BOTTOM SWEEP	VINYL
53	#9 X 2-1/2" PFH WOOD SCREW	STEEL
54	3/4" INSULATED GLASS 1/8" TEMPERED – AIR – 1/8" TEMPERED	GLASS
55	1" INSULATED GLASS 1/8" TEMPERED – AIR – 1/8" TEMPERED	GLASS
56	1/2" INSULATED GLASS 1/8" TEMPERED – AIR – 1/8" TEMPERED	GLASS
57	GLAZING COMPOUND	SILICONE
58	SEALANT	SILICONE
59	#9 X 1" PPH SCREW (LITE FRAME)	STEEL
60	HINGE STILE (FIBER CLASSIC)	WOOD
61	LOCK STILE (FIBER CLASSIC)	LVL/WOOD
62	TOP RAIL (FIBER CLASSIC)	PVC
63	BOTTOM RAIL (FIBER CLASSIC)	PVC
64	PANEL REINFORCEMENT 0.023" THK. (FIBER CLASSIC)	STEEL
65	DOOR SKIN 0.072" THK. (FIBER CLASSIC) Fy = 6,000 PSI MIN.	FIBERGLASS

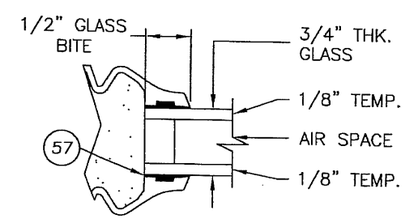

54 GLAZING DETAIL
3/4" INSULATED GLASS

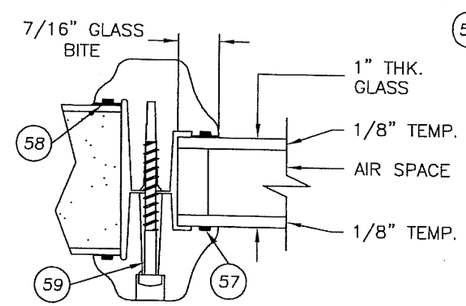

55 GLAZING DETAIL
1" INSULATED GLASS

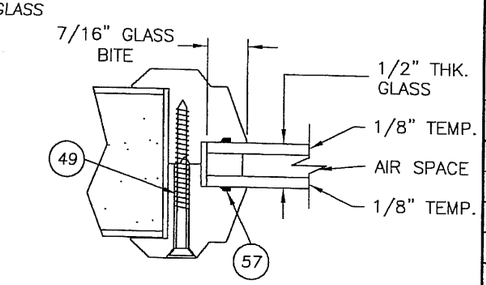

56 GLAZING DETAIL
1/2" INSULATED GLASS

Documents Prepared By:
R W BUILDING CONSULTANTS, INC.
P.O. Box 230 Valrico FL. 33595
Phone No.: 813.659.9197
Florida Board of Professional Engineers
Certificate Of Authorization No. 9813
Wendell W. Haney, P.E. No. 54158

PRODUCT: SINGLE FIBERGLASS DOOR W/SIDELITES "IMPACT" INSWING / OUTSWING

PART OR ASSEMBLY: BILL OF MATERIALS & GLAZING DETAILS

NO.	DATE	REVISIONS	BY

DATE: 12/15/06
SCALE: N.T.S.
DWG. BY: AEM
CHK. BY: WWH
DRAWING NO.: TX-3168
SHEET 12 OF 12

© 2006 R.W. BUILDING CONSULTANTS INC.

THERMA-TRU®

118 INDUSTRIAL DR., EDGERTON, OH 43517
TEL. (419)298-1740

SMOOTH STAR, FIBER CLASSIC, CLASSIC CRAFT & CLASSIC CRAFT RUSTIC

DOUBLE "IMPACT" DOOR INSWING / OUTSWING

EVALUATED FOR USE IN THE STATE OF TEXAS

THE THERMA–TRU FIBERGLASS DOOR DESCRIBED HEREIN COMPLIES WITH THE INTERNATIONAL RESIDENTIAL CODE (IRC), SECTIONS R301 & R613 AND THE INTERNATIONAL BUILDING CODE (IBC), SECTIONS 1714.5 1405.12, 1609, 2403 AND 2404 (INCLUDING TEXAS REVISIONS) SUBJECT TO THE FOLLOWING CONDITIONS:

1. *Anchors shall be as listed and spaced as shown in the details. Anchor embedment to base material shall be beyond wall dressing or stucco.*
2. *When used in wind borne debris regions (SEAWARD and INLAND I ZONES), the Product complies with Sections R301.2.1.2 and 1609.1.4 as an impact resistant product and does not require the use of an approved impact resistant covering. This product does not meet the requirements for enhanced protection of essential facilities as defined in ASTM E1996.*
3. *Allowable design pressure requirements must be equal to or less than the design pressure rating shown in the design pressure chart, sheet 1 of this drawing.*
4. *Conditions not covered by this drawing are subject to further engineering analysis.*

SUPPORTING DOCUMENTS & EVIDENCE

1. *Testing per TAS 201–94, TAS 202–94 and TAS 203–94 as performed by Testing Evaluation Laboratories Inc. and reported in test report number TEL 06–1031–2, dated October 31, 2006 and signed by Wendell W. Haney, P.E.*
2. *Anchor analysis for loading conditions prepared, signed and sealed by Wendell W. Haney, P.E..*
3. *Certificate of Participation issued by the National Accreditation and Management Institute, Inc., certifying that Therma–Tru Corporation. is manufacturing products within a Quality Assurance program.*

TABLE OF CONTENTS

SHEET #	DESCRIPTION
1	TYPICAL ELEVATION, DESIGN PRESSURES & GENERAL NOTES
2	DOOR PANEL DETAILS (SMOOTH STAR)
3	DOOR PANEL DETAILS (CLASSIC CRAFT)
4	DOOR PANEL DETAILS (CLASSIC CRAFT RUSTIC)
5	DOOR PANEL DETAILS (FIBER CLASSIC)
6	HORIZONTAL CROSS SECTIONS
7	VERTICAL CROSS SECTIONS
8	FRAME ANCHORING
9	ASTRAGAL DETAILS
10	BILL OF MATERIALS & COMPONENTS

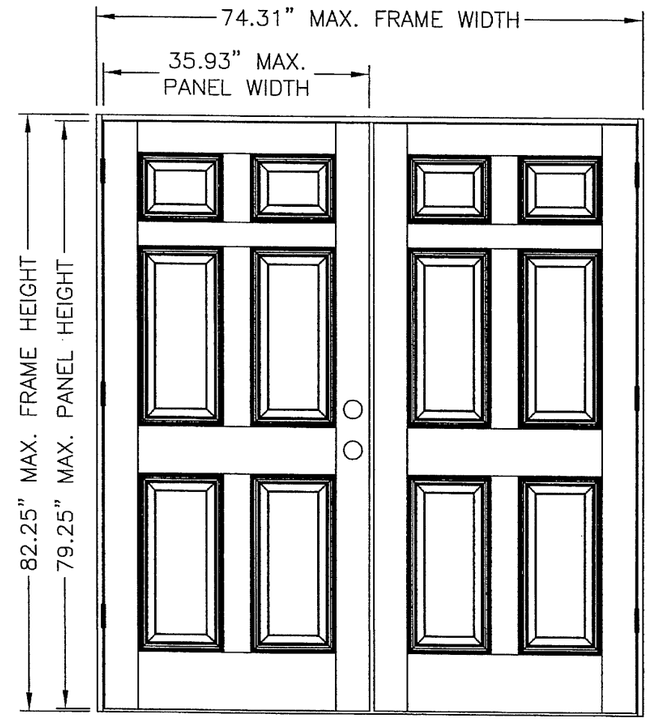

"SMOOTH STAR", "CLASSIC CRAFT", "CLASSIC CRAFT RUSTIC" & "FIBER CLASSIC"

DOOR TYPE	SWING	DESIGN PRESSURE	
		POSITIVE	NEGATIVE
CLASSIC CRAFT	OUTSWING	+70.0	−70.0
	INSWING	+70.0	−70.0
FIBER CLASSIC	OUTSWING	+70.0	−70.0
	INSWING	+70.0	−70.0
SMOOTH STAR	OUTSWING	+70.0	−70.0
	INSWING	+70.0	−70.0
RUSTIC	OUTSWING	+70.0	−70.0
	INSWING	+70.0	−70.0

Documents Prepared By:
RW BUILDING CONSULTANTS, INC.
P.O. Box 230 Valrico FL. 33595
Phone No.: 813.659.9197
Florida Board of Professional Engineers
Certificate Of Authorization No. 9813
Wendell W. Haney, P.E. No. 54158
2-14-07

PRODUCT: DOUBLE OPAQUE FIBERGLASS DOOR "IMPACT" INSWING / OUTSWING

PART OR ASSEMBLY: TYPICAL ELEVATION, DESIGN PRESSURES & GENERAL NOTES

NO.	DATE	REVISIONS	BY

DATE: 12/15/06
SCALE: N.T.S.
DWG. BY: AEM
CHK. BY: WWH
DRAWING NO.: TX–3169
SHEET 1 OF 10

© 2006 R.W. BUILDING CONSULTANTS INC.

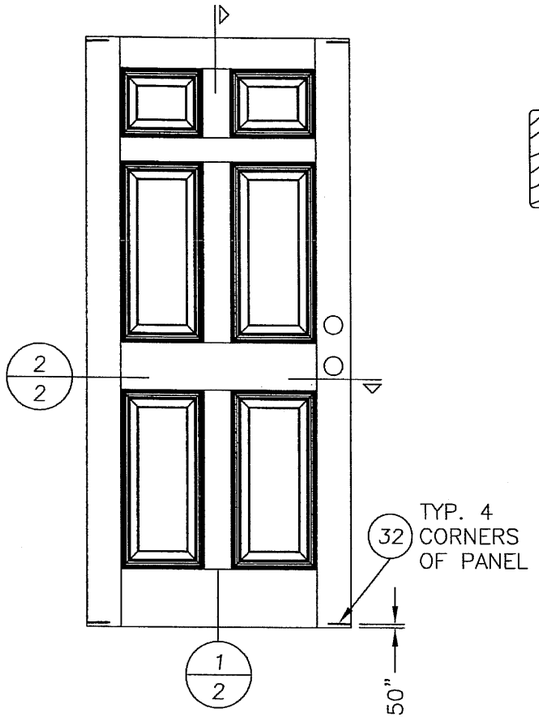

SMOOTH STAR

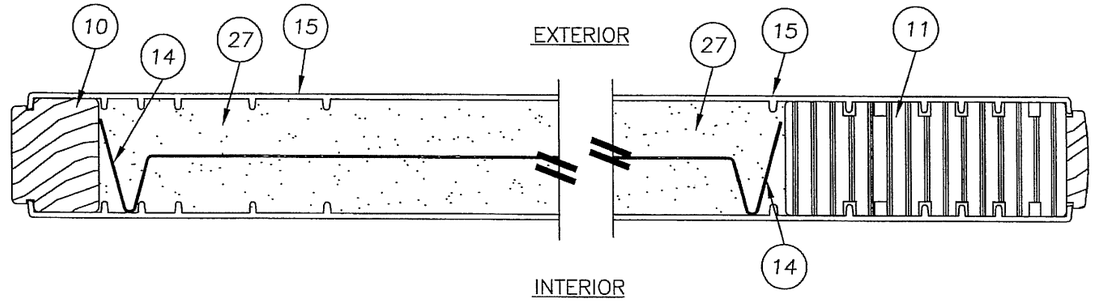

2/2 HORIZONTAL CROSS SECTION
SMOOTH STAR

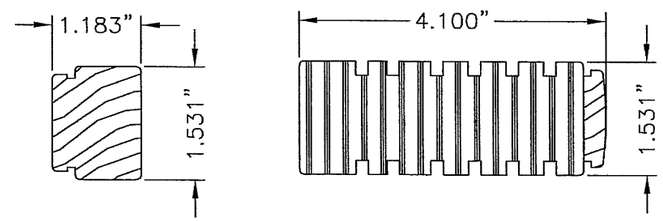

10 HINGE STILE
SMOOTH STAR

11 LOCK STILE
SMOOTH STAR

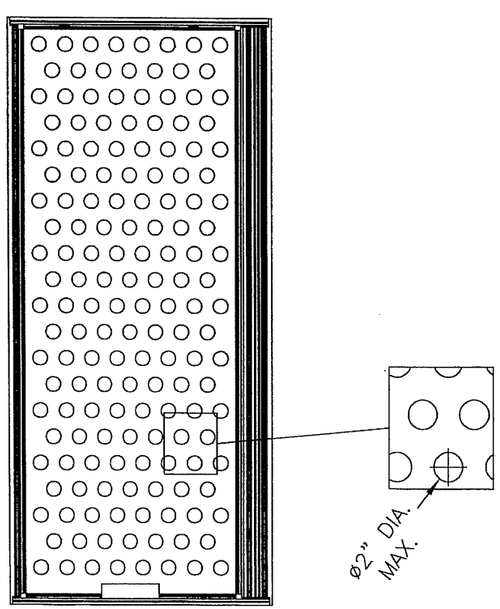

28.86% OPEN
AREA MAX.

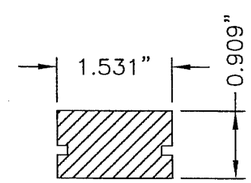

12 TOP RAIL
SMOOTH STAR

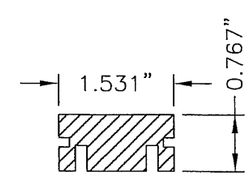

13 BOTTOM RAIL
SMOOTH STAR

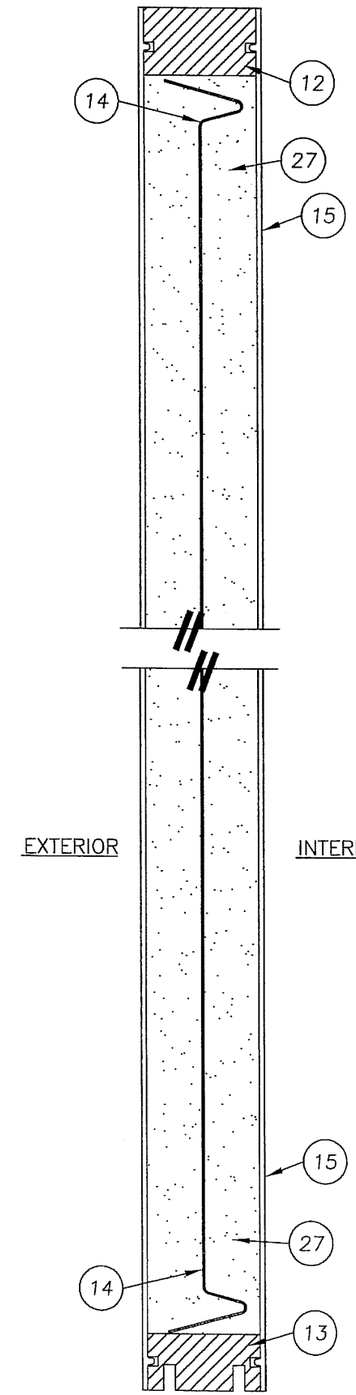

1/2 VERTICAL CROSS SECTION
SMOOTH STAR

Documents Prepared By:
RW BUILDING CONSULTANTS, INC.
P.O. Box 230 Valrico FL. 33595
Phone No.: 813.659.9197
Florida Board of Professional Engineers
Certificate Of Authorization No. 9813
Wendell W. Honeycutt P.E. No. 54158
2-14-07

PRODUCT:
DOUBLE OPAQUE
FIBERGLASS DOOR
"IMPACT" INSWING / OUTSWING

PART OR ASSEMBLY:
DOOR PANEL DETAILS
(SMOOTH STAR)

NO.	DATE	REVISIONS	BY

DATE: 12/15/06
SCALE: N.T.S.
DWG. BY: AEM
CHK. BY: WWH
DRAWING NO.: TX-3169
SHEET 2 OF 10

© 2006 R.W. BUILDING CONSULTANTS INC.

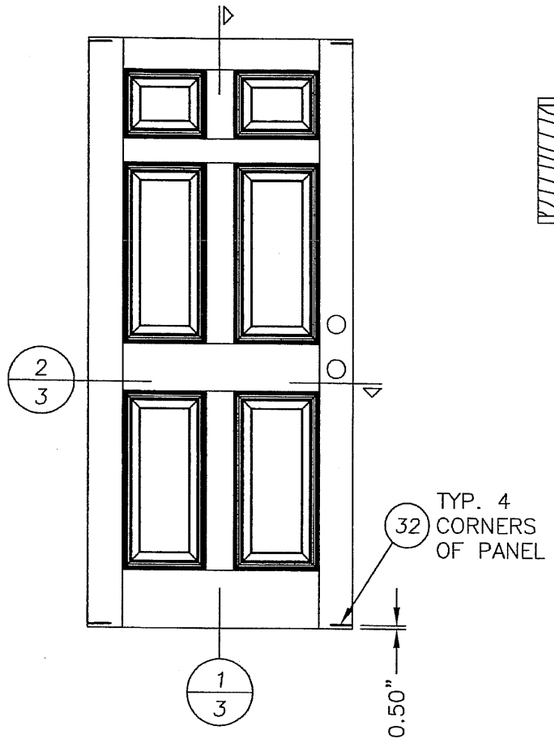

CLASSIC CRAFT

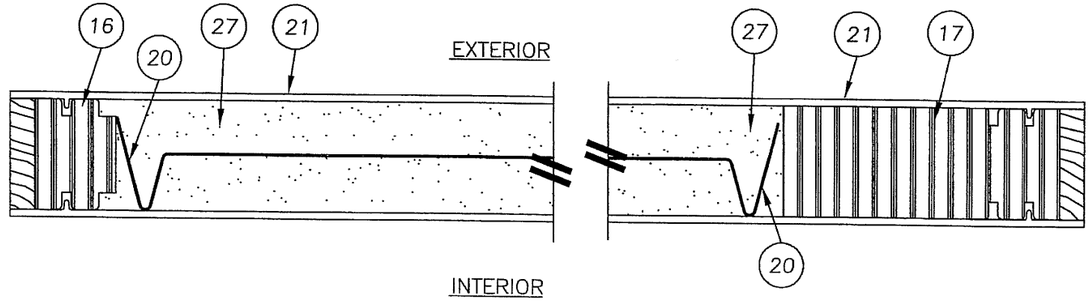

2/3 HORIZONTAL CROSS SECTION (CLASSIC CRAFT)

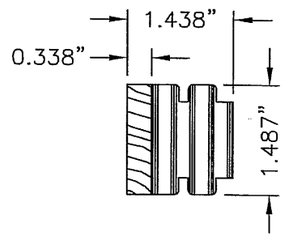

16 HINGE STILE CLASSIC CRAFT

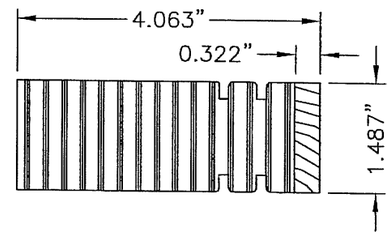

17 LOCK STILE CLASSIC CRAFT

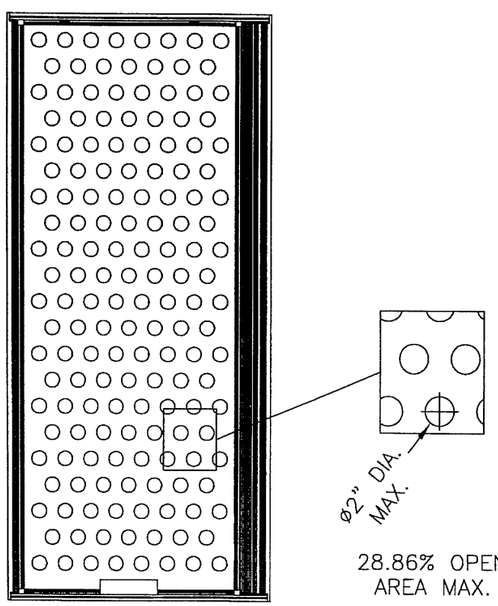

28.86% OPEN AREA MAX.

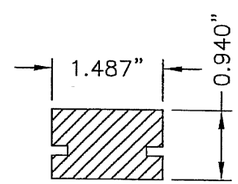

18 TOP RAIL CLASSIC CRAFT

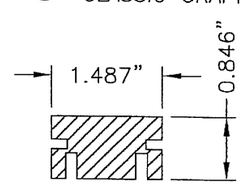

19 BOTTOM RAIL CLASSIC CRAFT

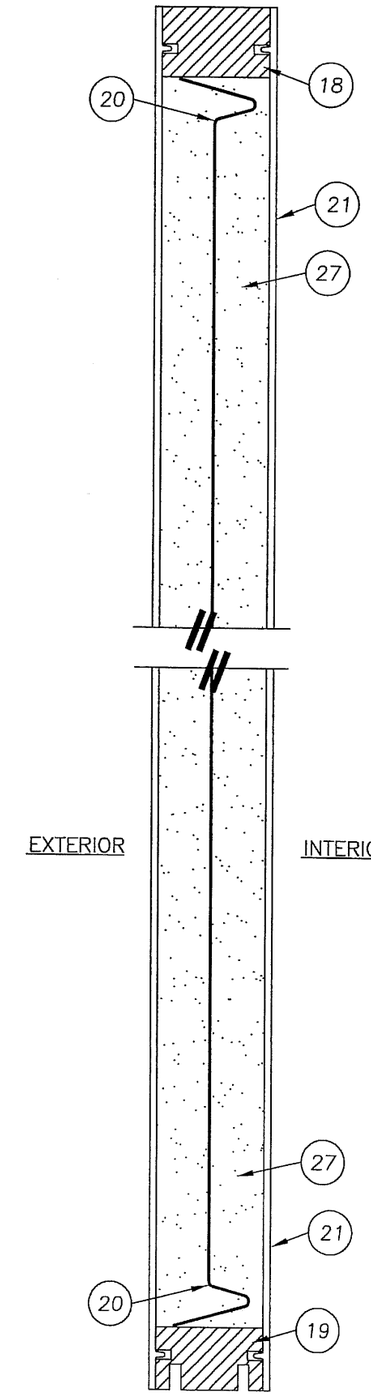

1/3 VERTICAL CROSS SECTION (CLASSIC CRAFT)

Documents Prepared By:
R.W. BUILDING CONSULTANTS, INC.
P.O. Box 230 Valrico FL. 33595
Phone No.: 813.659.9197
Florida Board of Professional Engineers
Certificate Of Authorization No. 9813
Wendell W. Harley, P.E. No. 54158

PRODUCT: DOUBEL OPAQUE FIBERGLASS DOOR "IMPACT" INSWING / OUTSWING

PART OR ASSEMBLY: DOOR PANEL DETAILS (CLASSIC CRAFT)

NO.	DATE	REVISIONS	BY

DATE: 12/15/06
SCALE: N.T.S.
DWG. BY: AEM
CHK. BY: WWH
DRAWING NO.: TX-3169
SHEET 3 OF 10

© 2006 R.W. BUILDING CONSULTANTS INC.

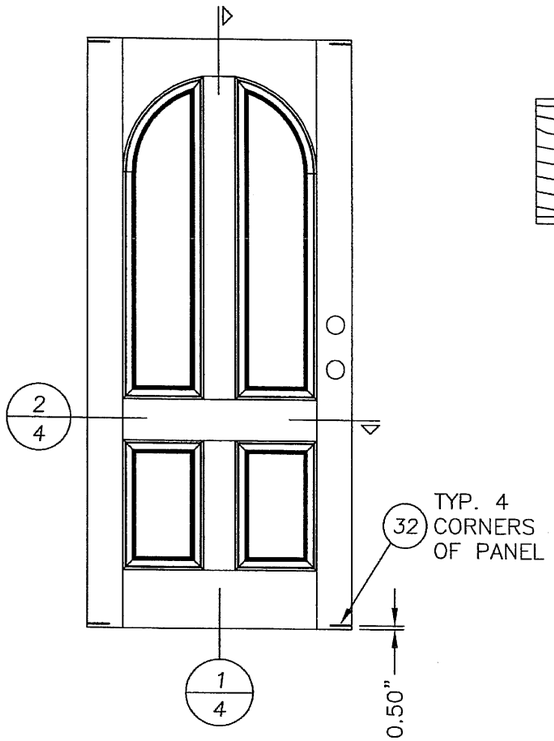

CLASSIC CRAFT RUSTIC

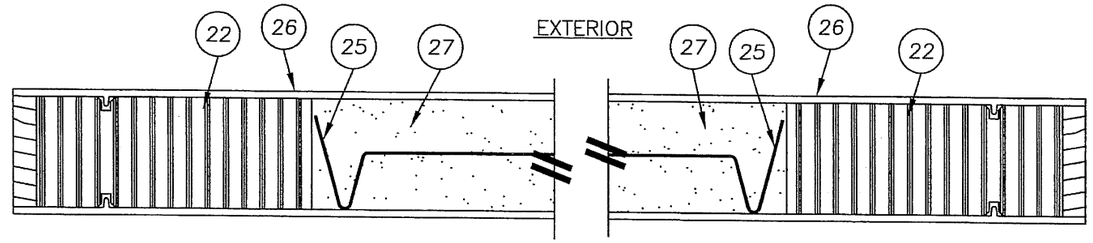

2/4 HORIZONTAL CROSS SECTION (CLASSIC CRAFT RUSTIC)

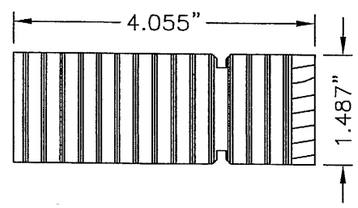

22 LOCK & HINGE STILE
CLASSIC CRAFT RUSTIC

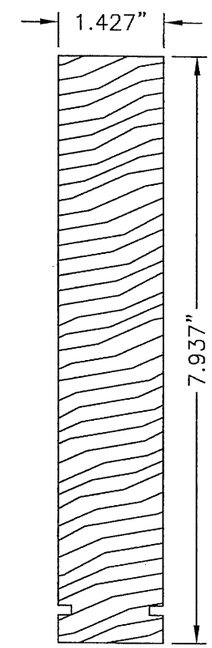

23 TOP RAIL
CLASSIC CRAFT RUSTIC

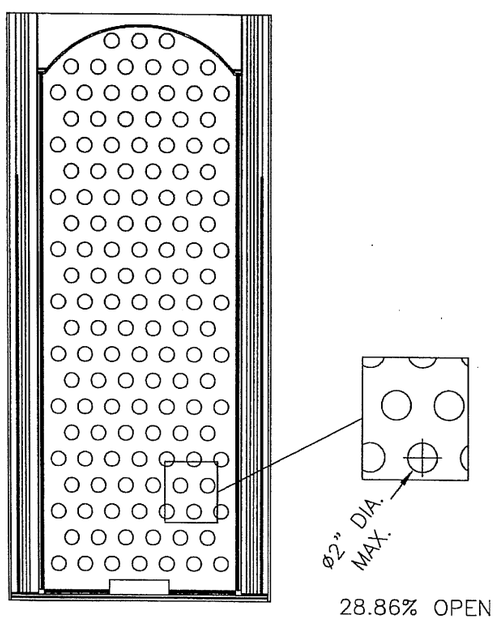

28.86% OPEN AREA MAX.

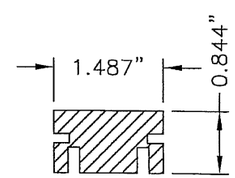

24 BOTTOM RAIL
CLASSIC CRAFT RUSTIC

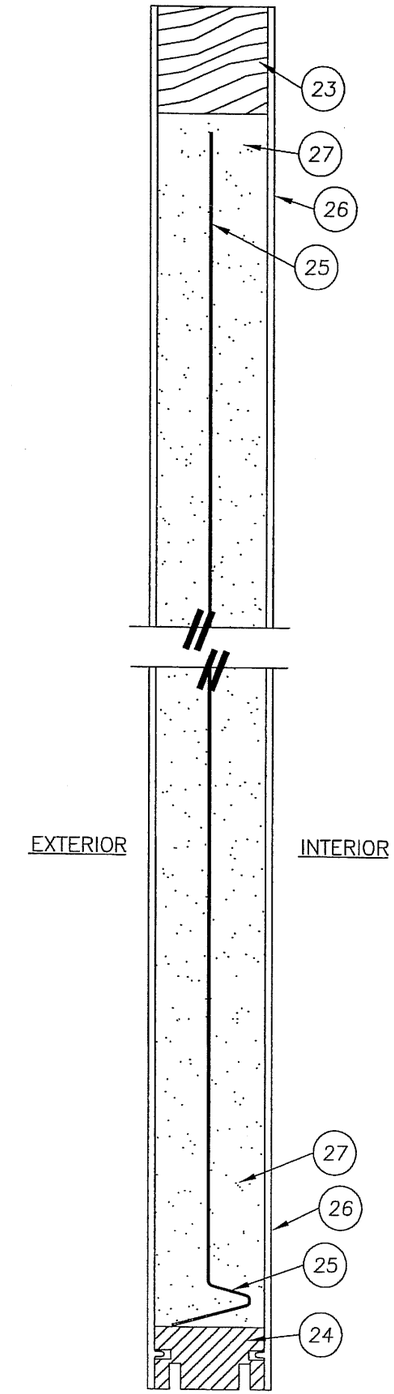

1/4 VERTICAL CROSS SECTION (CLASSIC CRAFT RUSTIC)

Documents Prepared By:

R W BUILDING CONSULTANTS, INC.
P.O. Box 230 Valrico FL. 33595
Phone No.: 813.659.9197
Florida Board of Professionaly Engineers
Certificate Of Authorization No. 9813
Wendell W. Haney, P.E. No. 54158
2-14-07

PRODUCT: DOUBLE OPAQUE FIBERGLASS DOOR "IMPACT" INSWING / OUTSWING

PART OR ASSEMBLY: DOOR PANEL DETAILS (CLASSIC CRAFT RUSTIC)

NO.	DATE	BY

REVISIONS

DATE: 12/15/06
SCALE: N.T.S.
DWG. BY: AEM
CHK. BY: WWH
DRAWING NO.: TX-3169
SHEET 4 OF 10

© 2006 R.W. BUILDING CONSULTANTS INC.

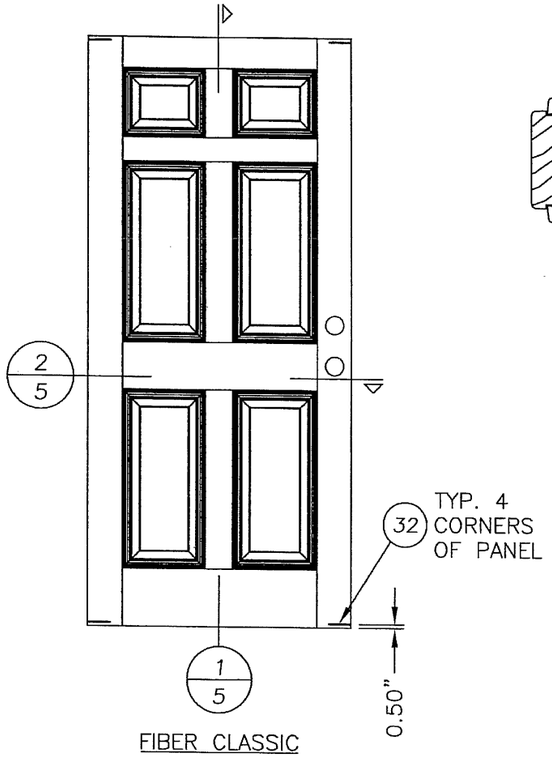

FIBER CLASSIC

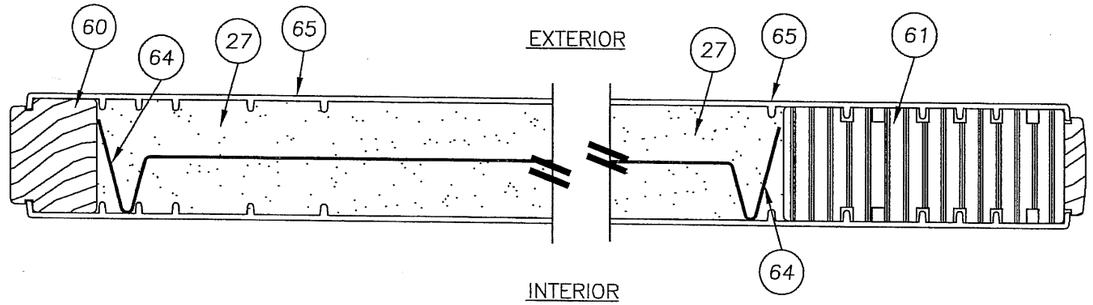

2/5 HORIZONTAL CROSS SECTION
FIBER CLASSIC

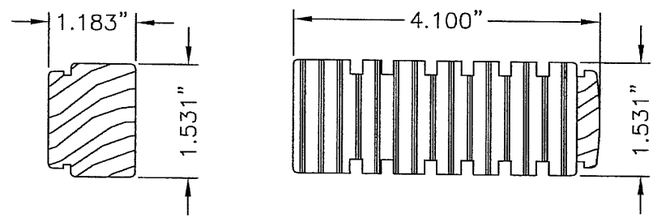

60 HINGE STILE
FIBER CLASSIC

61 LOCK STILE
FIBER CLASSIC

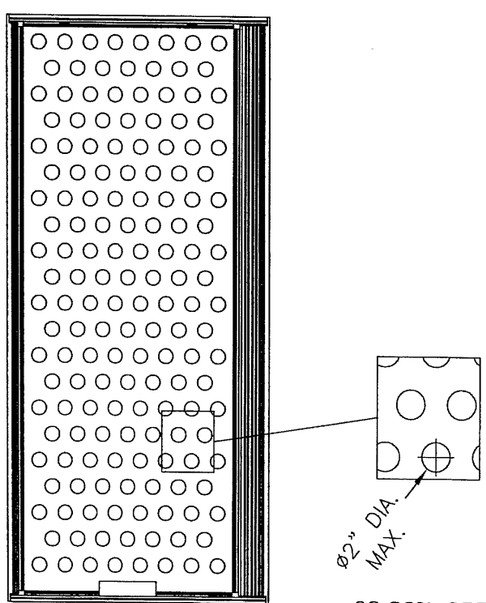

28.86% OPEN
AREA MAX.

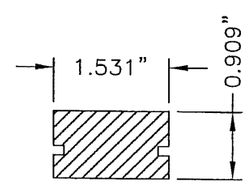

62 TOP RAIL
FIBER CLASSIC

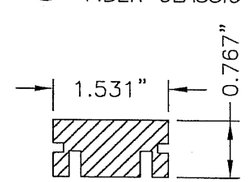

63 BOTTOM RAIL
FIBER CLASSIC

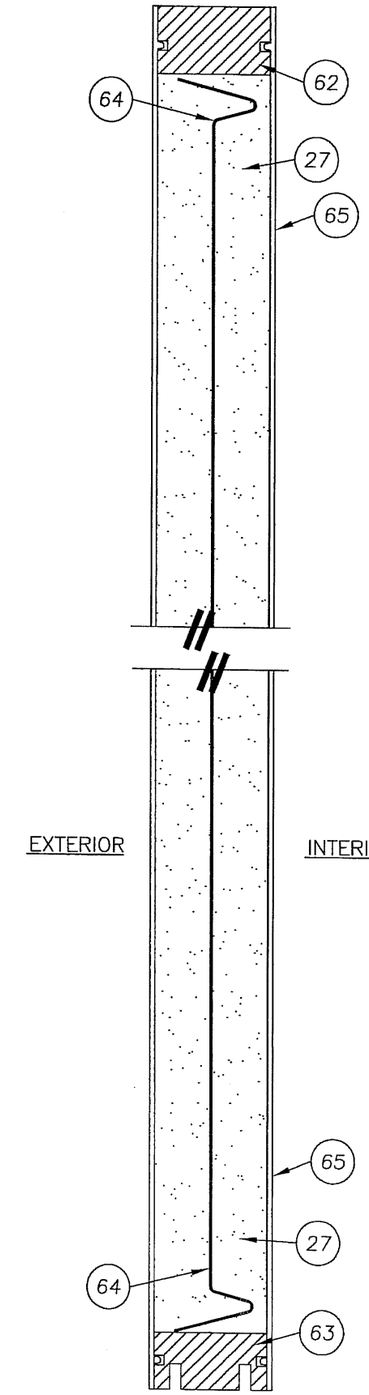

1/5 VERTICAL CROSS SECTION
FIBER CLASSIC

Documents Prepared By:
RW BUILDING CONSULTANTS, INC.
P.O. Box 230 Valrico FL. 33595
Phone No.: 813.659.9197
Florida Board of Professional Engineers
Certificate Of Authorization No. 9813
Wendell W. Haney, P.E. No. 54158
2-14-07

PRODUCT: DOUBLE OPAQUE FIBERGLASS DOOR "IMPACT" INSWING / OUTSWING

PART OR ASSEMBLY: DOOR PANEL DETAILS (FIBER CLASSIC)

NO.	DATE	REVISIONS	BY

DATE: 12/15/06
SCALE: N.T.S.
DWG. BY: AEM
CHK. BY: WWH
DRAWING NO.: TX-3169
SHEET 5 OF 10

© 2006 R.W. BUILDING CONSULTANTS INC.

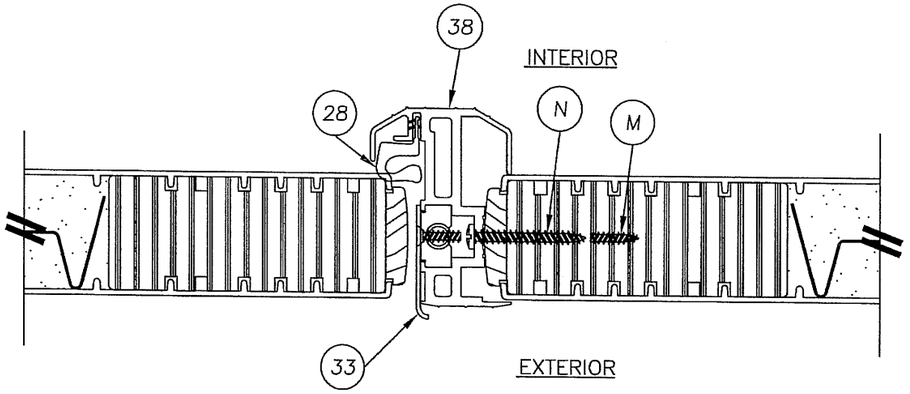

2/6 HORIZONTAL CROSS SECTION
@ ASTRAGAL
SMOOTH STAR PANEL SHOWN
SEE DOOR PANEL DETAILS FOR
OPTIONAL PANEL TYPES

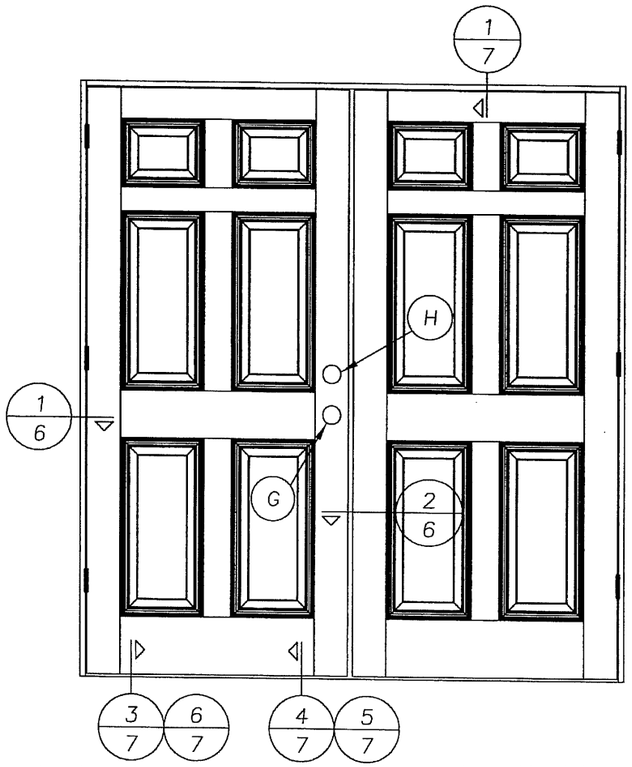

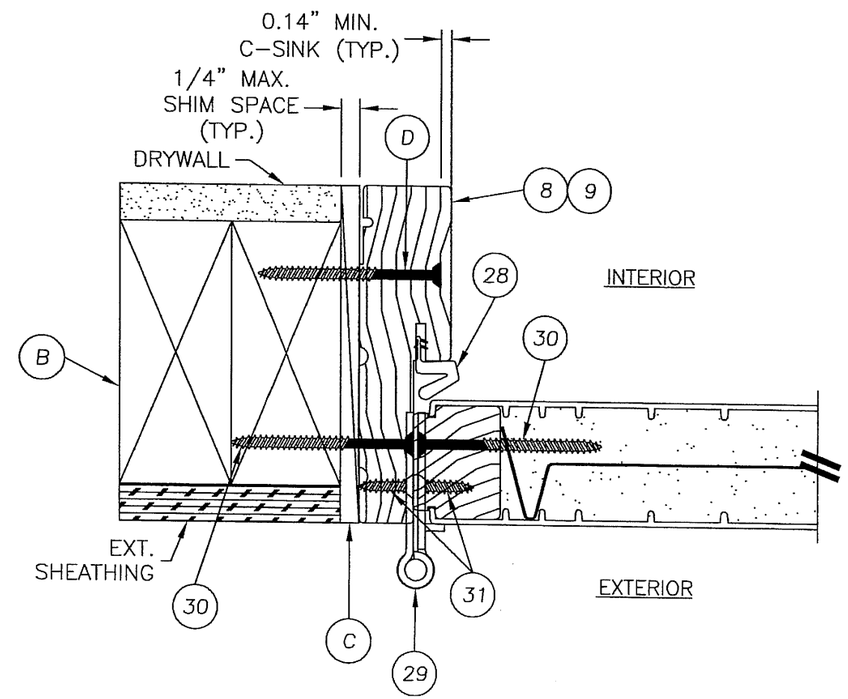

1/6 HORIZONTAL CROSS SECTION
@ HINGE
SMOOTH STAR PANEL SHOWN
SEE DOOR PANEL DETAILS FOR
OPTIONAL PANEL TYPES

Documents Prepared By:
RW BUILDING CONSULTANTS, INC.
P.O. Box 230 Valrico, FL. 33595
Phone. No.: 813.659.9197
Florida Board of Professional Engineers
Certificate Of Authorization No. 9813
Wendell W. Hare, P.E. No. 54158
2-14-07

PRODUCT: DOUBLE OPAQUE FIBERGLASS DOOR "IMPACT" INSWING / OUTSWING
PART OR ASSEMBLY: HORIZONTAL CROSS SECTIONS

NO.	DATE	REVISIONS	BY

DATE: 12/15/06
SCALE: N.T.S.
DWG. BY: AEM
CHK. BY: WWH
DRAWING NO.: TX-3169
SHEET 6 OF 10

© 2006 R.W. BUILDING CONSULTANTS INC.

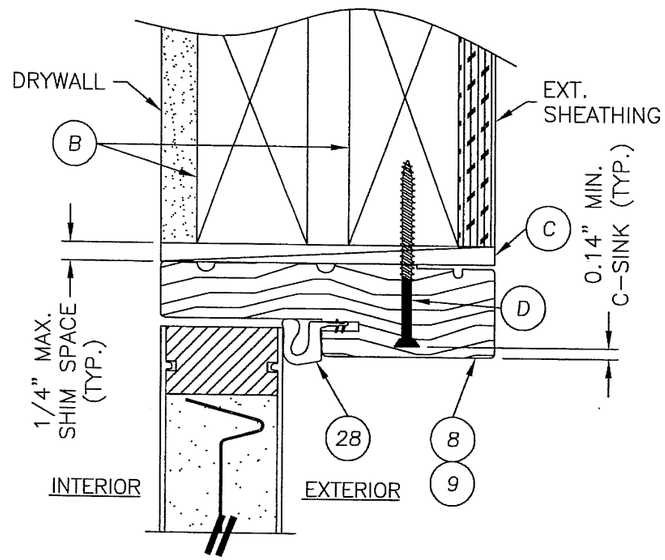

1/7 VERTICAL CROSS SECTION
@ HEAD
SMOOTH STAR PANEL SHOWN
SEE DOOR PANEL DETAILS FOR
OPTIONAL PANEL TYPES

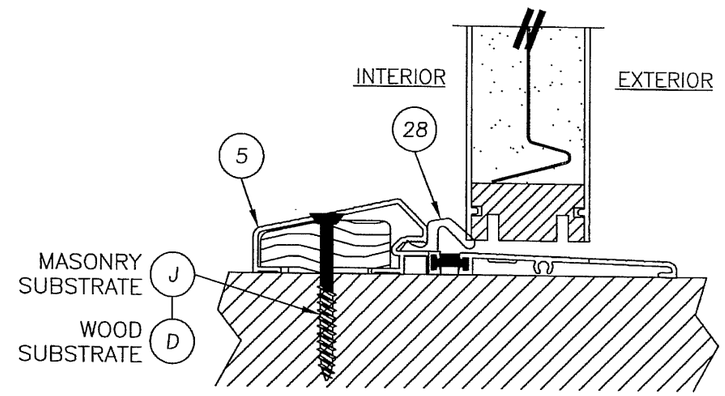

3/7 VERTICAL CROSS SECTION
@ THRESHOLD
SMOOTH STAR PANEL SHOWN
SEE DOOR PANEL DETAILS FOR
OPTIONAL PANEL TYPES

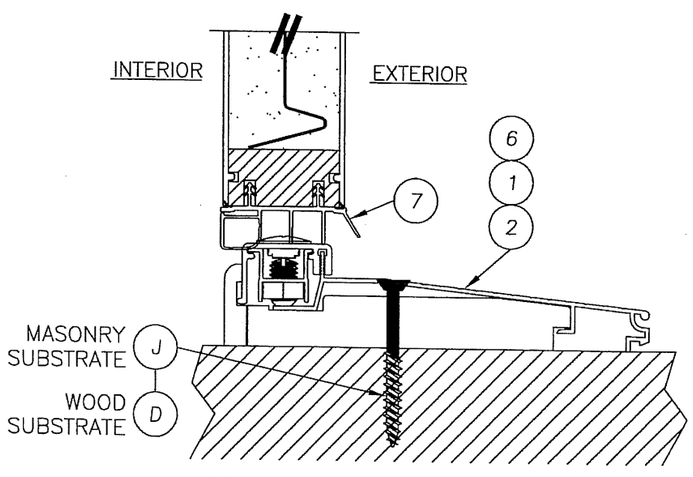

4/7 VERTICAL CROSS SECTION
@ THRESHOLD
SMOOTH STAR PANEL SHOWN
SEE DOOR PANEL DETAILS FOR
OPTIONAL PANEL TYPES

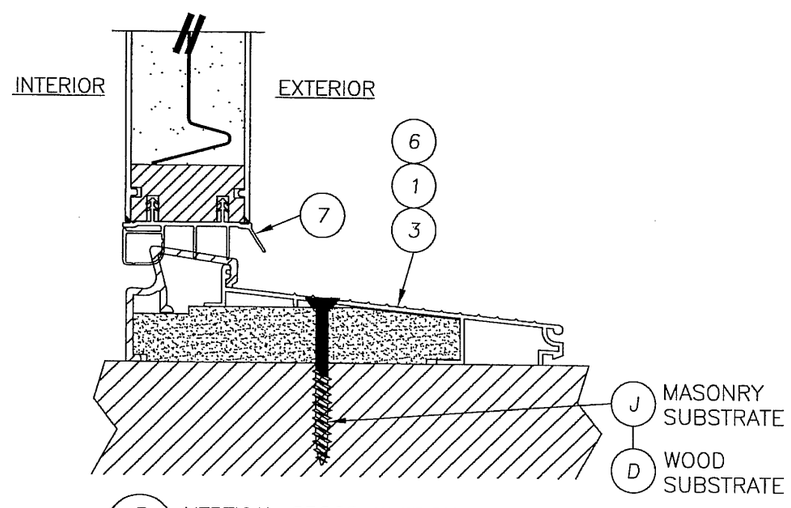

5/7 VERTICAL CROSS SECTION
@ THRESHOLD
SMOOTH STAR PANEL SHOWN
SEE DOOR PANEL DETAILS FOR
OPTIONAL PANEL TYPES

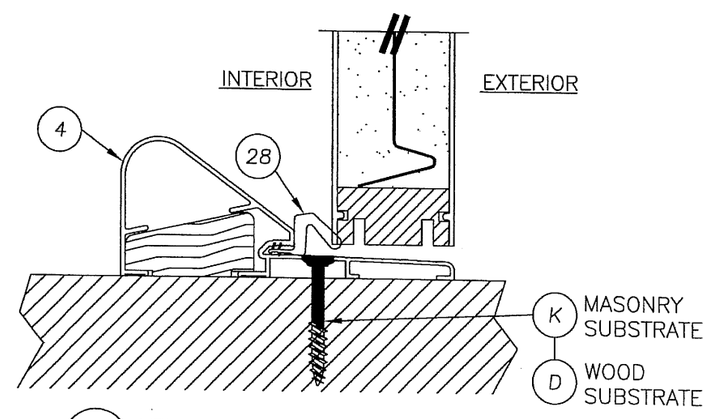

6/7 VERTICAL CROSS SECTION
@ THRESHOLD
SMOOTH STAR PANEL SHOWN
SEE DOOR PANEL DETAILS FOR
OPTIONAL PANEL TYPES

Documents Prepared By:
RW BUILDING CONSULTANTS, INC.
P.O. Box 230 Valrico FL. 33595
Phone No.: 813.659.9197
Florida Board of Professional Engineers
Certificate Of Authorization No. 9813
Wendell W. Hines, P.E. No. 54158

PRODUCT: DOUBLE OPAQUE FIBERGLASS DOOR "IMPACT" INSWING / OUTSWING

PART OR ASSEMBLY: VERTICAL CROSS SECTIONS

NO.	DATE	REVISIONS	BY

DATE: 12/15/06
SCALE: N.T.S.
DWG. BY: AEM
CHK. BY: WWH
DRAWING NO.: TX-3169
SHEET 7 OF 10

© 2006 R.W. BUILDING CONSULTANTS INC.

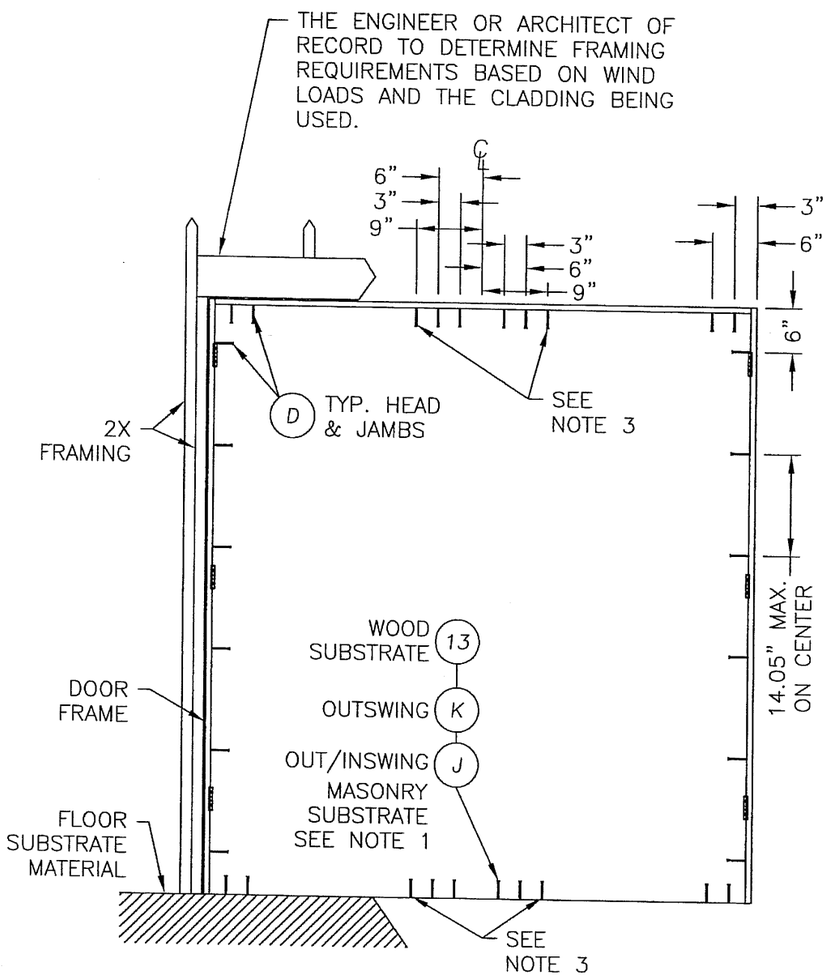

FRAME ANCHORING

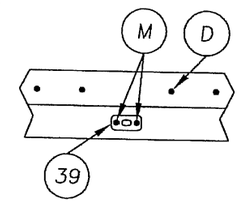

ASTRAGAL STRIKE PLATE @ HEAD

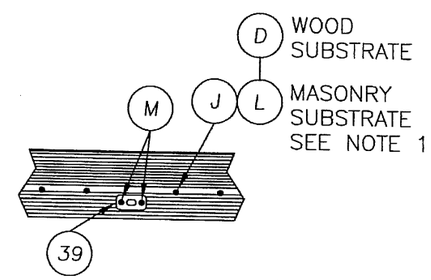

ASTRAGAL STRIKE PLATE @ THRESHOLD

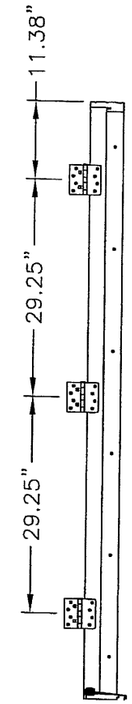

HINGE DETAIL

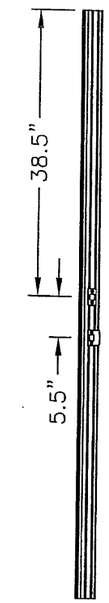

STRIKE PLATE DETAIL
DOUBLE DOOR

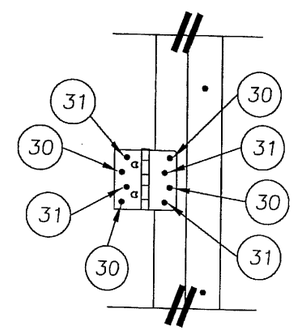

HINGE DETAIL

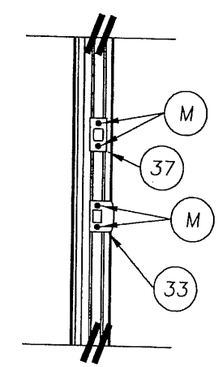

STRIKE PLATE DETAIL

NOTES:

1. 1/4" ITW CONCRETE SCREWS ANCHORING FRAME AND/OR SILL REQUIRE A MINIMUM 2-1/2" CLEARANCE TO MASONRY EDGES AND A MINIMUM 3" CLEARANCE TO ADJACENT CONCRETE SCREWS UNLESS OTHERWISE NOTED BY CONCRETE SCREW MANUFACTURER.
3. THESE SCREWS ARE REQUIRED ONLY WHEN THE DP EXCEEDS 47 PSF.

Documents Prepared By:
RW BUILDING CONSULTANTS, INC.
P.O. Box 230 Valrico FL. 33595
Phone No.: 813.659.9197
Florida Board of Professional Engineers
Certificate Of Authorization No. 9813
Wendell W. Haney, P.E. No. 54158

PRODUCT: DOUBLE OPAQUE FIBERGLASS DOOR "IMPACT" INSWING / OUTSWING
PART OR ASSEMBLY: FRAME ANCHORING

NO.	DATE	REVISIONS	BY

DATE: 12/15/06
SCALE: N.T.S.
DWG. BY: AEM
CHK. BY: WWH
DRAWING NO.: TX-3169
SHEET 8 OF 10

© 2006 R.W. BUILDING CONSULTANTS INC.

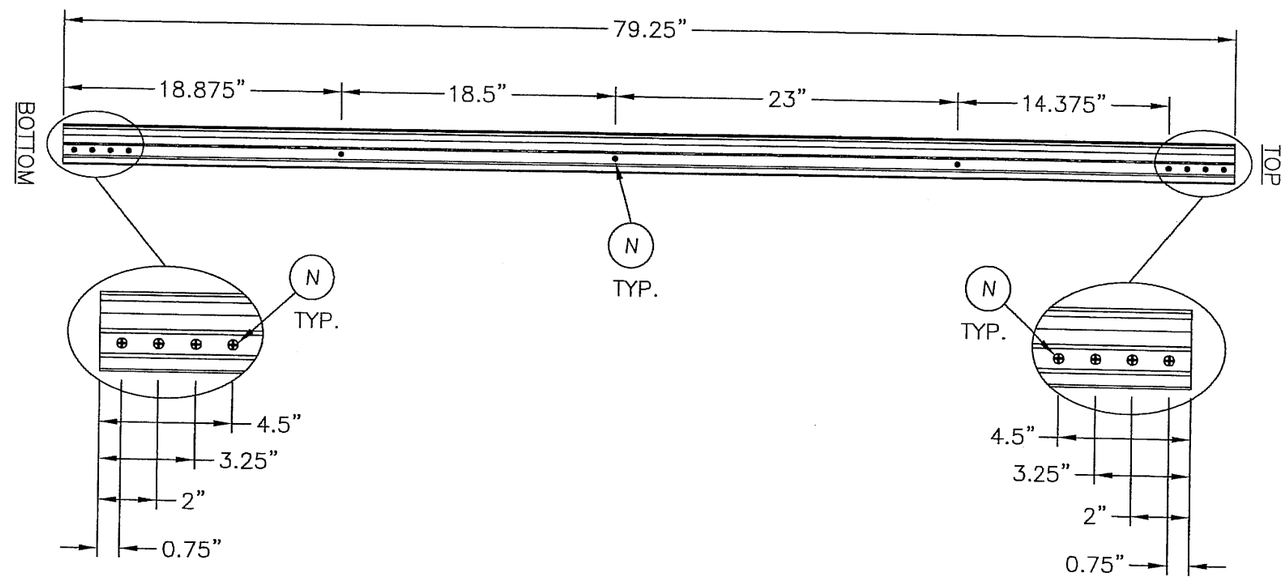

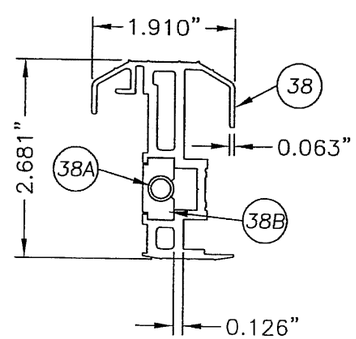

38 ASTRAGAL DETAIL

Documents Prepared By:

R.W. BUILDING CONSULTANTS, INC.
P.O. Box 230 Valrico FL. 33595
Phone No.: 813.659.9197

Florida Board of Professional Engineers
Certificate Of Authorization No. 9813

Wendell W. Hanes, P.E. No. 54158

2-14-07

PRODUCT: DOUBLE OPAQUE FIBERGLASS DOOR "IMPACT" INSWING / OUTSWING

PART OR ASSEMBLY: ASTRAGAL DETAILS

NO.	DATE	REVISIONS	BY

DATE: 12/15/06
SCALE: N.T.S.
DWG. BY: AEM
CHK. BY: WWH
DRAWING NO.: TX-3169
SHEET 9 OF 10

© 2006 R.W. BUILDING CONSULTANTS INC.

BILL OF MATERIALS

ITEM	DESCRIPTION	MATERIAL
B	2X FRAMING	WOOD
C	1/4" MAX. SHIM SPACE	WOOD
D	#10 X 2-1/2" PFH WOOD SCREW	STEEL
G	KWIKSET 200 SERIES PASSAGE LOCK	STEEL
H	KWIKSET 600 SERIES DEADBOLT	STEEL
I	1/4" X 3-3/4" ITW TAPCON	STEEL
J	1/4" X 2-1/4" ITW TAPCON	STEEL
K	1/4" X 1-3/4" ITW TAPCON	STEEL
M	#8 X 3" PFH SCREW (STRIKE PLATES @ HEAD & SILL)	STEEL
N	#10 X 1-1/2" PPH SCREW ASTRAGAL TO PANEL	STEEL
1	INSWING ADJUSTABLE THRESHOLD (IS300AJ)	ALUM./WOOD
2	INSWING THRESHOLD (IS300HP5)	–
3	INSWING SELF ADJUST THERMAL BREAK THRESHOLD (ISP30M)	ALUM./COMP.
4	OUTSWING COASTAL THRESHOLD	ALUM./WOOD
5	OUTSWING STANDARD THRESHOLD	ALUM./WOOD
6	INSWING THRESHOLD	–
7	DOOR BOTTOM SWEEP	VINYL
8	JAMB (PINE)	WOOD
9	JAMB (OAK)	WOOD
10	HINGE STILE (SMOOTH STAR)	WOOD
11	LOCK STILE (SMOOTH STAR)	LVL/WOOD
12	TOP RAIL (SMOOTH STAR)	PVC
13	BOTTOM RAIL (SMOOTH STAR)	PVC
14	PANEL REINFORCEMENT 0.023" THK. (SMOOTH STAR)	STEEL
15	DOOR SKIN 0.072" THK. (SMOOTH STAR) Fy = 6,000 PSI MIN.	FIBERGLASS
16	HINGE STILE (CLASSIC CRAFT)	WOOD/LVL
17	LOCK STILE (CLASSIC CRAFT)	WOOD/LVL
18	TOP RAIL (CLASSIC CRAFT)	PVC
19	BOTTOM RAIL (CLASSIC CRAFT)	PVC
20	PANEL REINFORCEMENT 0.023" THK. (CLASSIC CRAFT)	STEEL
21	DOOR SKIN 0.090" THK. (CLASSIC CRAFT) Fy = 6,000 PSI MIN.	FIBERGLASS
22	LOCK & HINGE STILE (CLASSIC CRAFT RUSTIC)	WOOD/LVL
23	TOP RAIL (CLASSIC CRAFT RUSTIC)	WOOD
24	BOTTOM RAIL (CLASSIC CRAFT RUSTIC)	PVC
25	PANEL REINFORCEMENT 0.023" THK. (CLASSIC CRAFT RUSTIC)	STEEL
26	DOOR SKIN 0.090" THK. (CC RUSTIC) Fy = 6,000 PSI MIN.	FIBERGLASS
27	FOAM CORE	POLYURETHANE
28	WEATHERSTRIP	FOAM
29	HINGE	STEEL
30	#10 X 2-1/2" PFH SCREW	STEEL
31	#10 X 3/4" PFH SCREW	STEEL
32	#9 X 3" PFH WOOD SCREW	STEEL
33	LATCH STRIKE PLATE	STEEL
37	DEADBOLT STRIKE PLATE	STEEL
38	ASTRAGAL	ALUMINUM
38A	ASTRAGAL FLUSH BOLT	STEEL
38B	ASTRAGAL FLUSH BOLT RETAINER	ALUMINUM
39	ASTRAGAL STRIKE PLATE @ HEAD & THRESHOLD	STEEL

BILL OF MATERIALS

ITEM	DESCRIPTION	MATERIAL
60	HINGE STILE (FIBER CLASSIC)	WOOD
61	LOCK STILE (FIBER CLASSIC)	LVL/WOOD
62	TOP RAIL (FIBER CLASSIC)	PVC
63	BOTTOM RAIL (FIBER CLASSIC)	PVC
64	PANEL REINFORCEMENT 0.023" THK. (FIBER CLASSIC)	STEEL
65	DOOR SKIN 0.072" THK. (FIBER CLASSIC) Fy = 6,000 PSI MIN.	FIBERGLASS

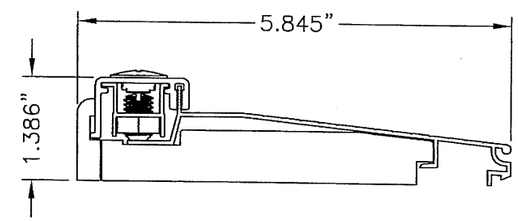

2 THRESHOLD
INSWING ADJUSTABLE

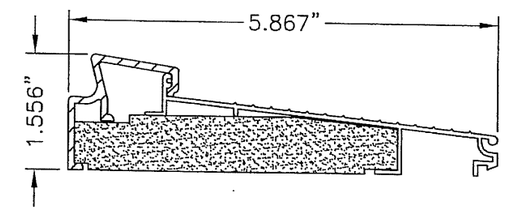

3 THRESHOLD
INSWING SELF-ADJUST

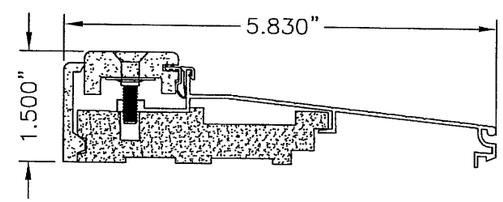

6 THRESHOLD
INSWING
MAX. DP RATING = +/- 50.0 PSF

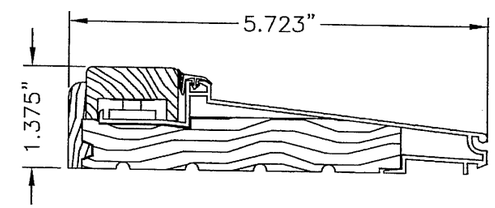

1 THRESHOLD
INSWING ADJUSTABLE

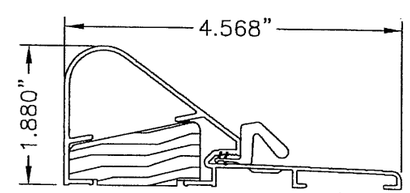

4 THRESHOLD
OUTSWING COASTAL

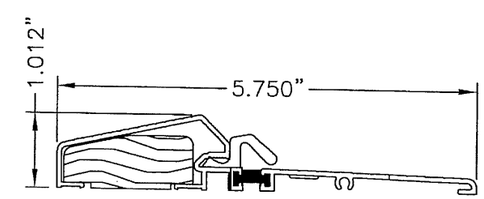

5 THRESHOLD
OUTSWING STANDARD

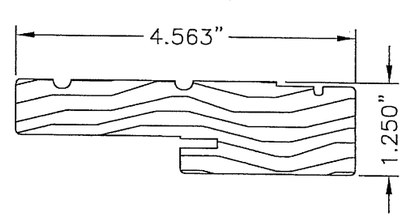

9 8 JAMB

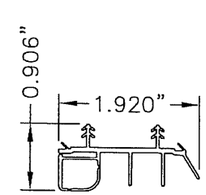

7 SWEEP

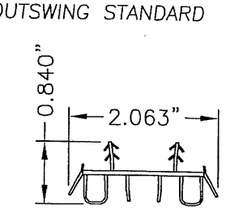

52 SWEEP

Documents Prepared By:
R.W. BUILDING CONSULTANTS, INC.
P.O. Box 230 Valrico FL. 33595
Phone No.: 813.659.9197
Florida Board of Professional Engineers
Certificate Of Authorization No. 9813
Wendell W. Hoffney, P.E. No. 54158

PRODUCT: DOUBLE OPAQUE FIBERGLASS DOOR "IMPACT" INSWING / OUTSWING

PART OR ASSEMBLY: BILL OF MATERIALS & COMPONENTS

NO.	DATE	REVISIONS	BY

DATE: 12/15/06
SCALE: N.T.S.
DWG. BY: AEM
CHK. BY: WWH
DRAWING NO.: TX-3169
SHEET 10 OF 10

© 2006 R.W. BUILDING CONSULTANTS INC.

THERMA-TRU®

118 INDUSTRIAL DR., EDGERTON, OH 43517
TEL. (419)298-1740

SMOOTH STAR, FIBER CLASSIC, CLASSIC CRAFT & CLASSIC CRAFT RUSTIC
DOUBLE "IMPACT" DOOR WITH "NON-IMPACT" SIDELITES INSWING / OUTSWING

EVALUATED FOR USE IN THE STATE OF TEXAS

THE THERMA–TRU FIBERGLASS DOOR DESCRIBED HEREIN COMPLIES WITH THE INTERNATIONAL RESIDENTIAL CODE (IRC), SECTIONS R301 & R613 AND THE INTERNATIONAL BUILDING CODE (IBC), SECTIONS 1714.5 1405.12, 1609, 2403 AND 2404 (INCLUDING TEXAS REVISIONS) SUBJECT TO THE FOLLOWING CONDITIONS:

1. Anchors shall be as listed and spaced as shown in the details. Anchor embedment to base material shall be beyond wall dressing or stucco.
2. When used in wind borne debris regions (SEAWARD and INLAND I ZONES), the Product complies with Sections R301.2.1.2 and 1609.1.4 as an impact resistant product and does not require the use of an approved impact resistant covering. This product does not meet the requirements for enhanced protection of essential facilities as defined in ASTM E1996.
3. Allowable design pressure requirements must be equal to or less than the design pressure rating shown in the design pressure chart, sheet 1 of this drawing.
4. Conditions not covered by this drawing are subject to further engineering analysis.

SUPPORTING DOCUMENTS & EVIDENCE

1. Testing per TAS 201–94, TAS 202–94 and TAS 203–94 as performed by Testing Evaluation Laboratories Inc. and reported in test report number TEL 06–1031–2, dated October 31, 2006 and signed by Wendell W. Haney, P.E.
2. Anchor analysis for loading conditions prepared, signed and sealed by Wendell W. Haney, P.E. Glass load resistance report ASTM E1300–00, prepared by Wendell W. Haney, P.E..
3. Certificate of Participation issued by the National Accreditation and Management Institute, Inc., certifying that Therma–Tru Corporation. is manufacturing products within a Quality Assurance program.

TABLE OF CONTENTS

SHEET #	DESCRIPTION
1	TYPICAL ELEVATION, DESIGN PRESSURES & GENERAL NOTES
2	DOOR PANEL DETAILS (SMOOTH STAR)
3	DOOR PANEL DETAILS (CLASSIC CRAFT)
4	DOOR PANEL DETAILS (CLASSIC CRAFT RUSTIC)
5	DOOR PANEL DETAILS (FIBER CLASSIC)
6	SIDELITE PANEL DETAILS
7	HORIZONTAL CROSS SECTIONS
8	VERTICAL CROSS SECTIONS
9	VERTICAL CROSS SECTIONS
10	FRAME ANCHORING
11	ASTRAGAL DETAILS, ANCHORING DETAILS & GLAZING DETAILS
12	COMPONENTS
13	BILL OF MATERIALS

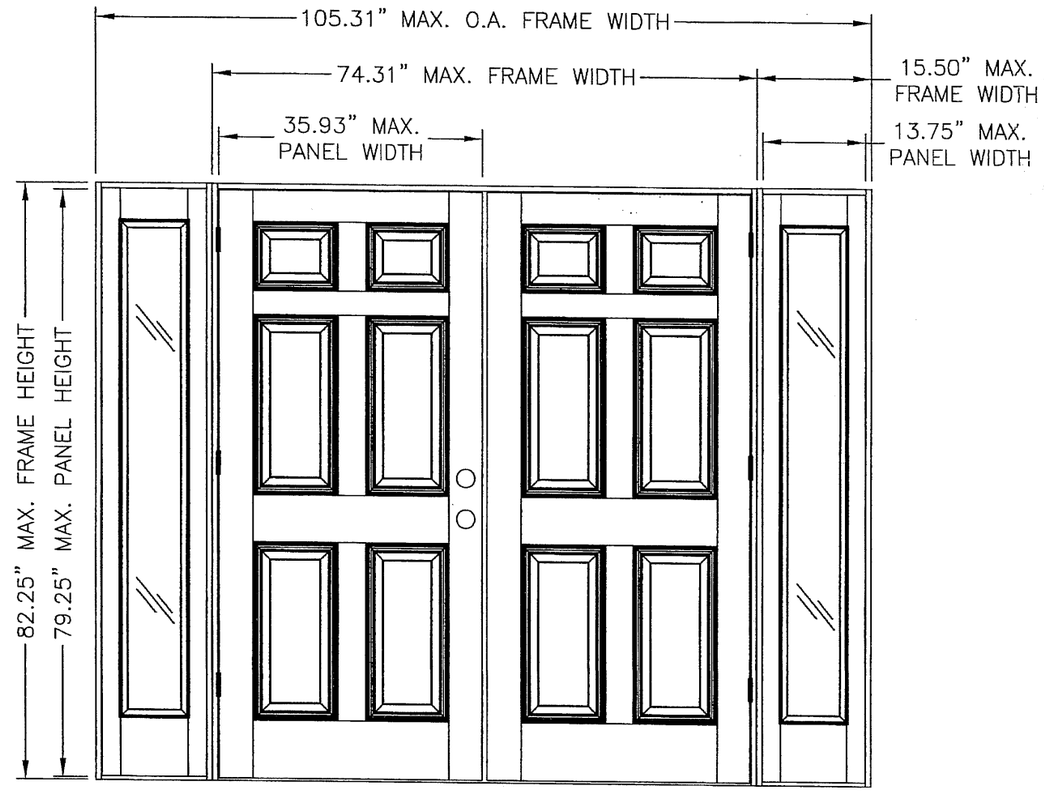

"SMOOTH STAR", "CLASSIC CRAFT", "CLASSIC CRAFT RUSTIC" & "FIBER CLASSIC"

DOOR TYPE	SWING	OVERALL FRAME DIMENSION	OVERALL SIDELITE D.L.O. DIMENSION	DESIGN PRESSURE	
				POSITIVE	NEGATIVE
CLASSIC CRAFT	OUTSWING	105.31" X 80.75"	7.09" X 63.09"	+70.0	−70.0
	INSWING	105.31" X 82.25"		+70.0	−70.0
FIBER CLASSIC	OUTSWING	105.31" X 80.75"		+70.0	−70.0
	INSWING	105.31" X 82.25"		+70.0	−70.0
SMOOTH STAR	OUTSWING	105.31" X 80.75"		+70.0	−70.0
	INSWING	105.31" X 82.25"		+70.0	−70.0
RUSTIC	OUTSWING	105.31" X 80.75"		+70.0	−70.0
	INSWING	105.31" X 82.25"		+70.0	−70.0

Documents Prepared By:
R.W. BUILDING CONSULTANTS, INC.
P.O. Box 230 Valrico FL. 33595
Phone No.: 813.659.9197
Florida Board of Professional Engineers
Certificate Of Authorization No. 9813
Wendell W. Haney, P.E. No. 54158

2-4-07

PRODUCT: DOUBLE OPAQUE FIBERGLASS DOOR W/SIDELITES "IMPACT" INSWING / OUTSWING

PART OR ASSEMBLY: TYPICAL ELEVATION, DESIGN PRESSURES & GENERAL NOTES

NO.	DATE	REVISIONS	BY

DATE: 12/15/06
SCALE: N.T.S.
DWG. BY: AEM
CHK. BY: WWH
DRAWING NO.: TX–3170
SHEET 1 OF 13

© 2006 R.W. BUILDING CONSULTANTS INC.

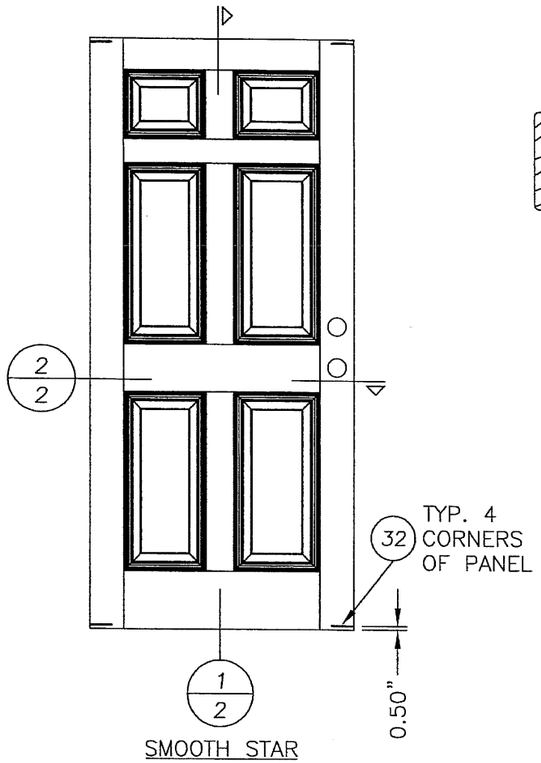

SMOOTH STAR

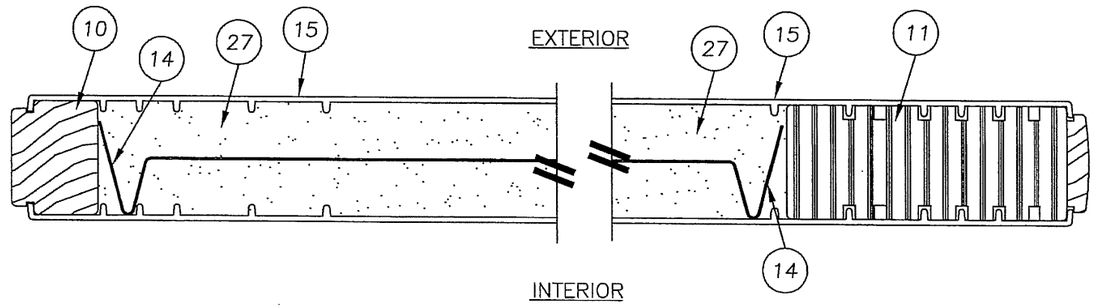

2/2 HORIZONTAL CROSS SECTION
SMOOTH STAR

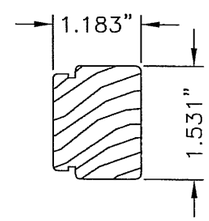

10 HINGE STILE
SMOOTH STAR

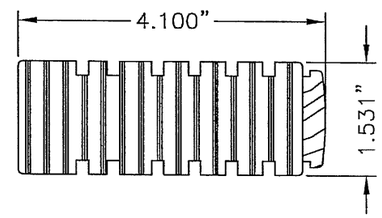

11 LOCK STILE
SMOOTH STAR

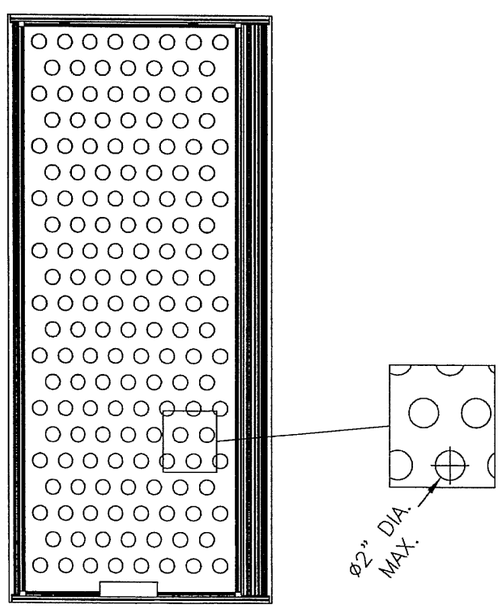

28.86% OPEN
AREA MAX.

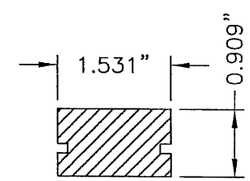

12 TOP RAIL
SMOOTH STAR

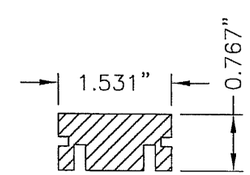

13 BOTTOM RAIL
SMOOTH STAR

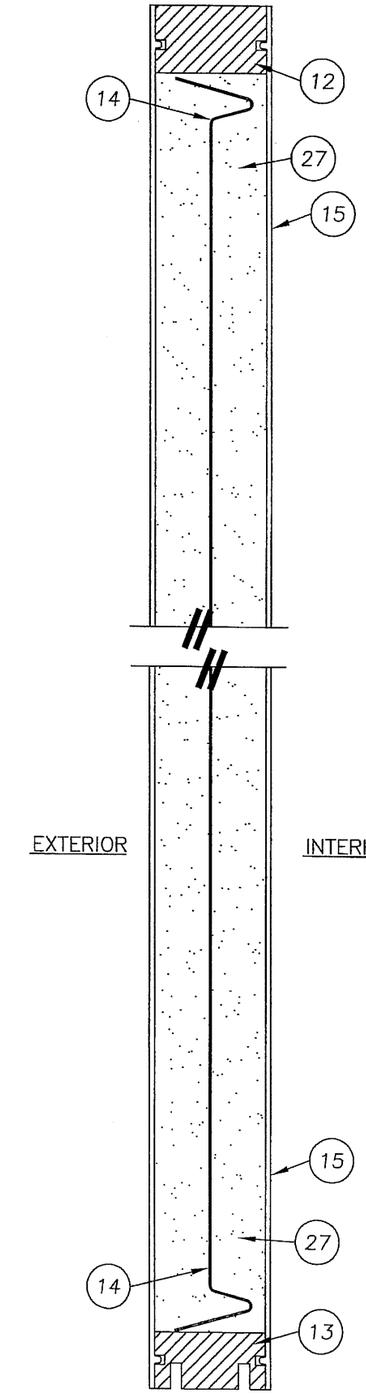

1/2 VERTICAL CROSS SECTION
SMOOTH STAR

Documents Prepared By:
RW BUILDING CONSULTANTS, INC.
P.O. Box 230 Valrico FL. 33595
Phone No.: 813.659.9197
Florida Board of Professional Engineers
Certificate Of Authorization No. 9813
Wendell W. Haney P.E. No. 54158
2-14-07

PRODUCT: DOUBLE OPAQUE FIBERGLASS DOOR W/SIDELITES "IMPACT" INSWING / OUTSWING

PART OR ASSEMBLY: DOOR PANEL DETAILS (SMOOTH STAR)

NO.	DATE	REVISIONS	BY

DATE: 12/15/06
SCALE: N.T.S.
DWG. BY: AEM
CHK. BY: WWH
DRAWING NO.: TX-3170
SHEET 2 OF 13

© 2006 R.W. BUILDING CONSULTANTS INC.

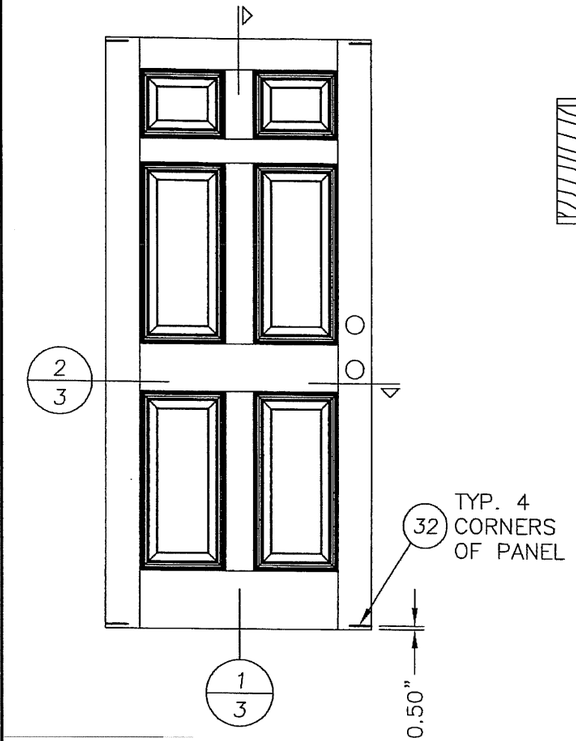

CLASSIC CRAFT

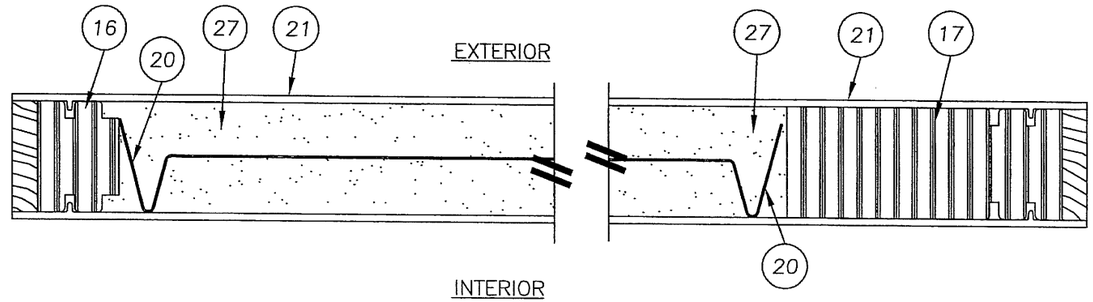

2/3 HORIZONTAL CROSS SECTION (CLASSIC CRAFT)

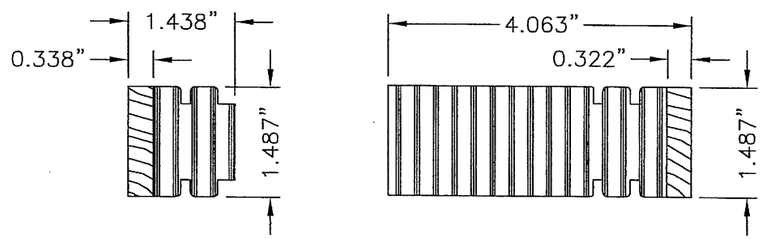

16 HINGE STILE CLASSIC CRAFT

17 LOCK STILE CLASSIC CRAFT

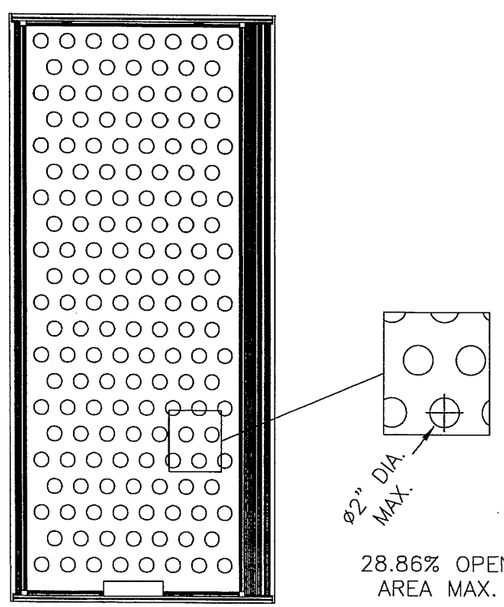

28.86% OPEN
AREA MAX.

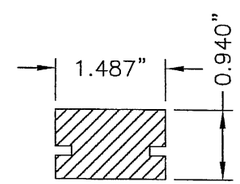

18 TOP RAIL CLASSIC CRAFT

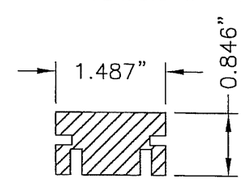

19 BOTTOM RAIL CLASSIC CRAFT

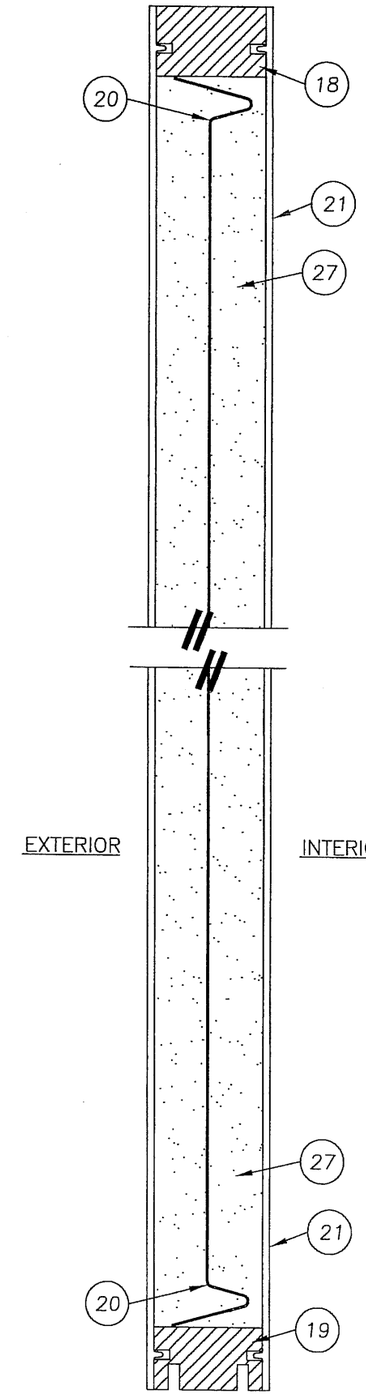

1/3 VERTICAL CROSS SECTION (CLASSIC CRAFT)

Documents Prepared By:
RW BUILDING CONSULTANTS, INC.
P.O. Box 230 Valrico FL. 33595
Phone No.: 813.659.9197
Florida Board of Professional Engineers
Certificate Of Authorization No. 9813
Wendell W. Harvey, P.E. No. 54158
2-14-07

PRODUCT: DOUBLE OPAQUE FIBERGLASS DOOR W/SIDELITES "IMPACT" INSWING / OUTSWING

PART OR ASSEMBLY: DOOR PANEL DETAILS (CLASSIC CRAFT)

NO.	DATE	REVISIONS	BY

DATE: 12/15/06
SCALE: N.T.S.
DWG. BY: AEM
CHK. BY: WWH
DRAWING NO.: TX-3170
SHEET 3 OF 13

© 2006 R.W. BUILDING CONSULTANTS INC.

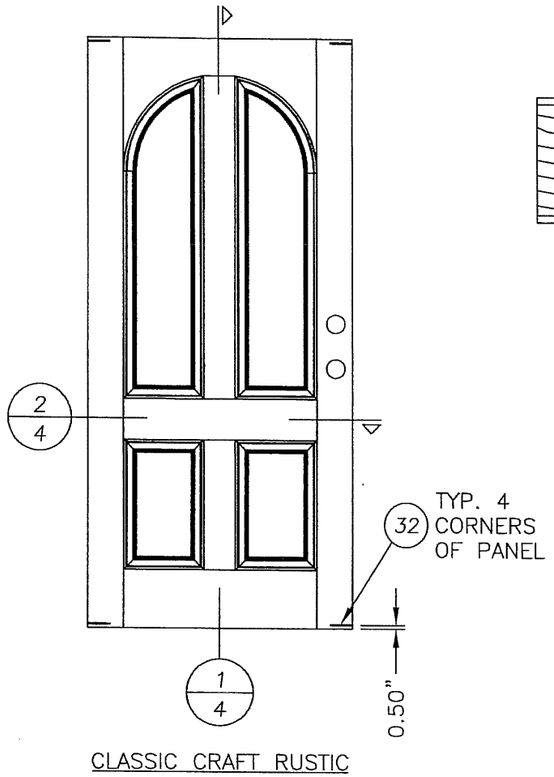

CLASSIC CRAFT RUSTIC

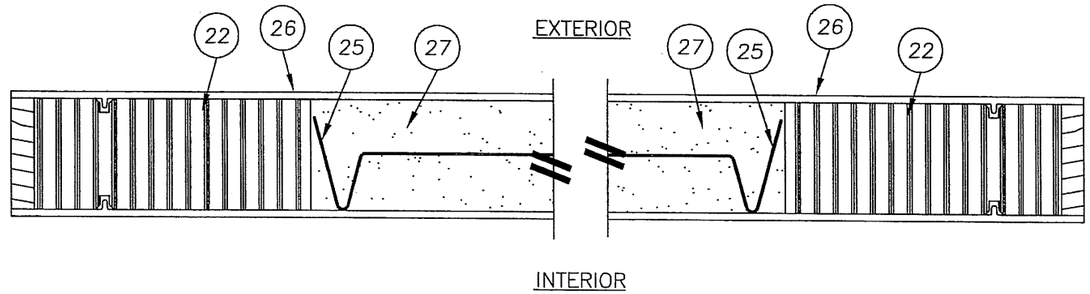

2/4 HORIZONTAL CROSS SECTION (CLASSIC CRAFT RUSTIC)

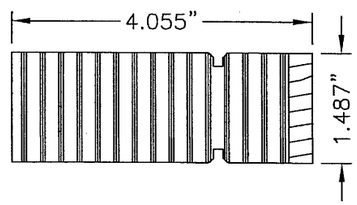

22 LOCK & HINGE STILE CLASSIC CRAFT RUSTIC

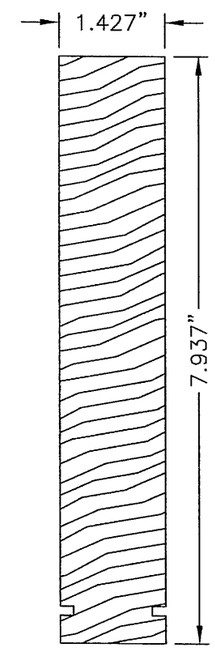

23 TOP RAIL CLASSIC CRAFT RUSTIC

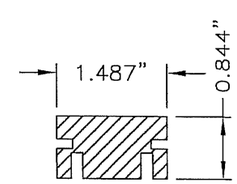

24 BOTTOM RAIL CLASSIC CRAFT RUSTIC

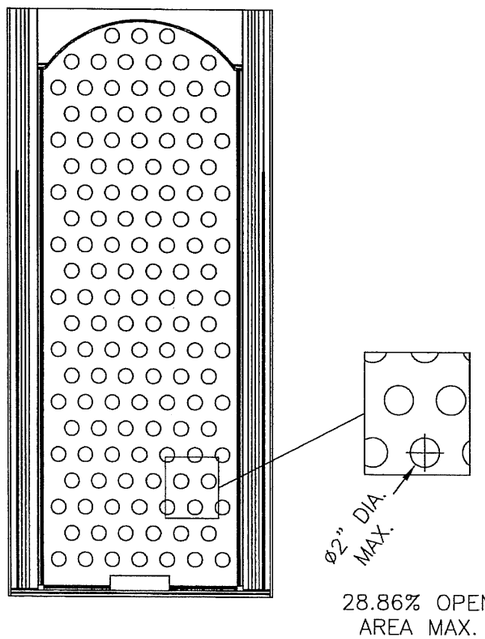

28.86% OPEN AREA MAX.

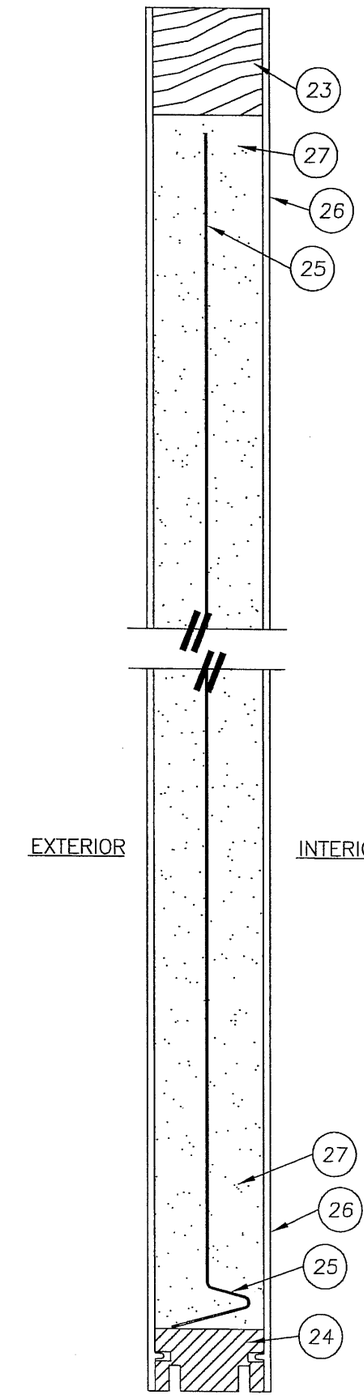

1/4 VERTICAL CROSS SECTION (CLASSIC CRAFT RUSTIC)

Documents Prepared By:
RW BUILDING CONSULTANTS, INC.
P.O. Box 230 Valrico FL. 33595
Phone No.: 813.659.9197
Florida Board of Professional Engineers
Certificate Of Authorization No. 9813
Wendell W. Haney, P.E. No. 54158
2-14-07

PRODUCT: DOUBLE OPAQUE FIBERGLASS DOOR W/SIDELITES "IMPACT" INSWING / OUTSWING

PART OR ASSEMBLY: DOOR PANEL DETAILS (CLASSIC CRAFT RUSTIC)

NO.	DATE	REVISIONS	BY

DATE: 12/15/06
SCALE: N.T.S.
DWG. BY: AEM
CHK. BY: WWH
DRAWING NO.: TX-3170
SHEET 4 OF 13

© 2006 R.W. BUILDING CONSULTANTS INC.

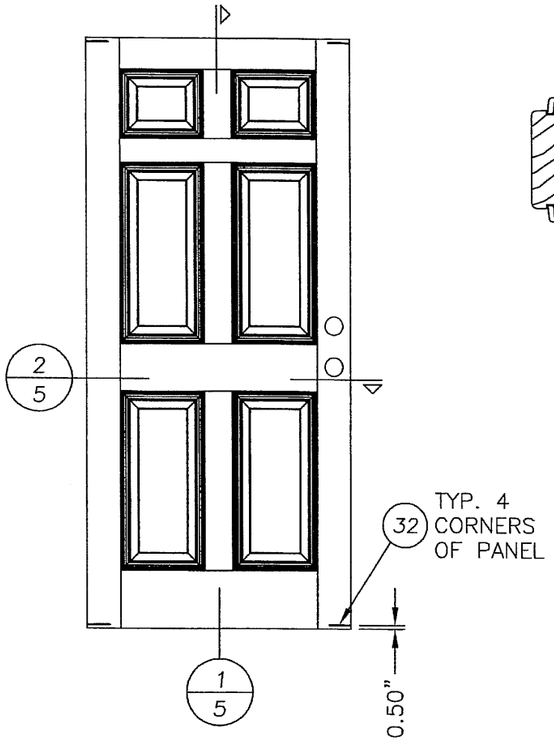

FIBER CLASSIC

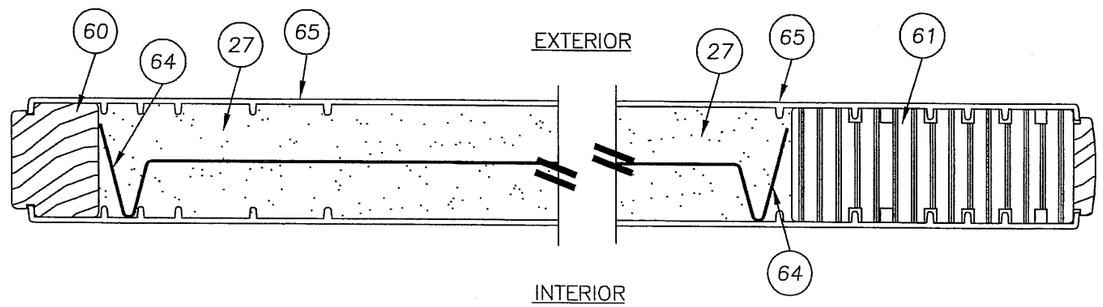

2/5 HORIZONTAL CROSS SECTION
FIBER CLASSIC

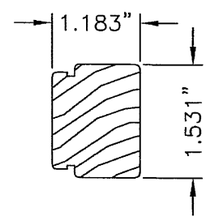

60 HINGE STILE
FIBER CLASSIC

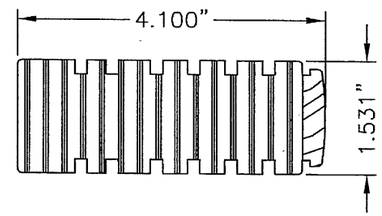

61 LOCK STILE
FIBER CLASSIC

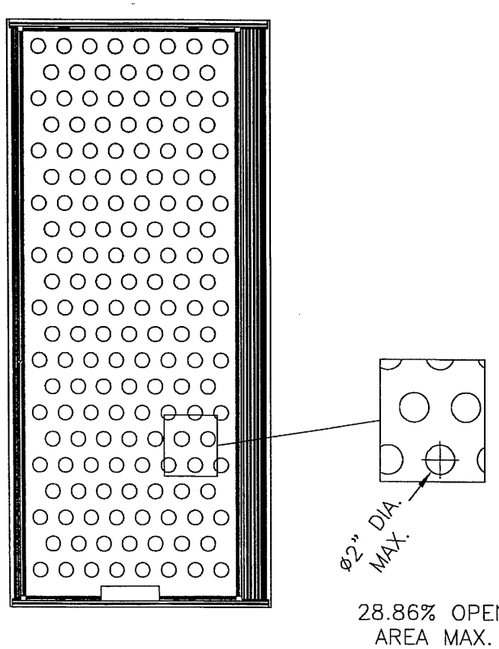

28.86% OPEN
AREA MAX.

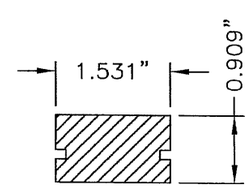

62 TOP RAIL
FIBER CLASSIC

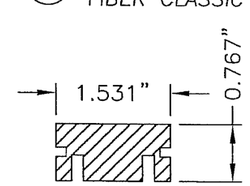

63 BOTTOM RAIL
FIBER CLASSIC

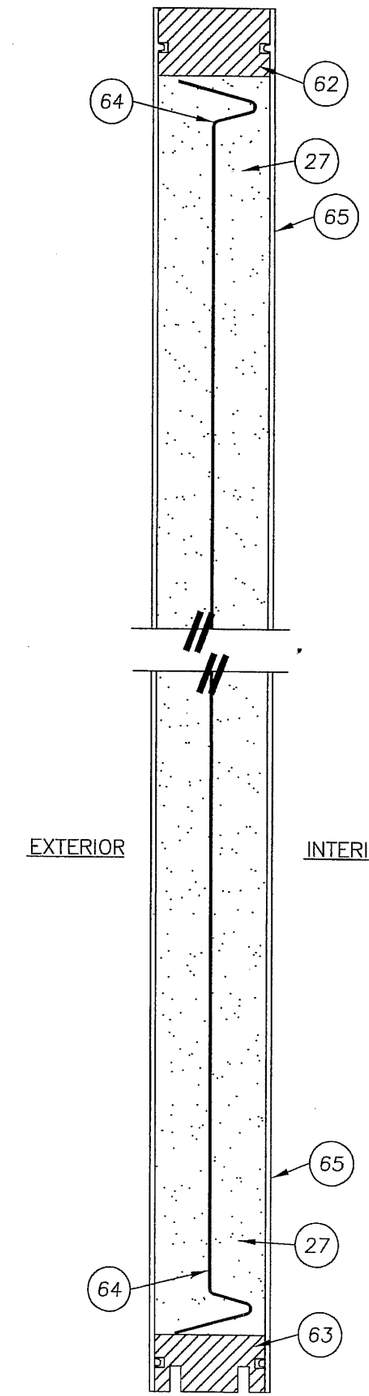

1/5 VERTICAL CROSS SECTION
FIBER CLASSIC

Documents Prepared By:
RW BUILDING CONSULTANTS, INC.
P.O. Box 230 Valrico FL. 33595
Phone No.: 813.659.9197
Florida Board of Professional Engineers
Certificate Of Authorization No. 9813
Wendell W. Hafey, P.E. No. 54158
2-14-07

PRODUCT: DOUBLE OPAQUE FIBERGLASS DOOR W/SIDELITES "IMPACT" INSWING / OUTSWING

PART OR ASSEMBLY: DOOR PANEL DETAILS (FIBER CLASSIC)

NO.	DATE	BY

REVISIONS

DATE: 12/15/06
SCALE: N.T.S.
DWG. BY: AEM
CHK. BY: WWH
DRAWING NO.: TX-3170
SHEET 5 OF 13

© 2006 R.W. BUILDING CONSULTANTS INC.

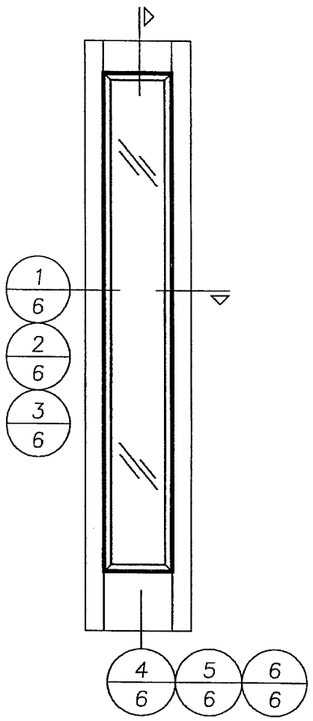

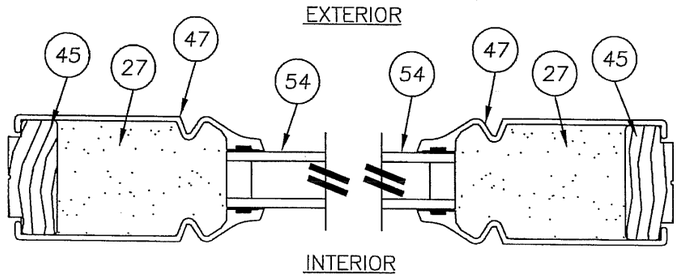

1/6 HORIZONTAL CROSS SECTION (CLASSIC CRAFT)

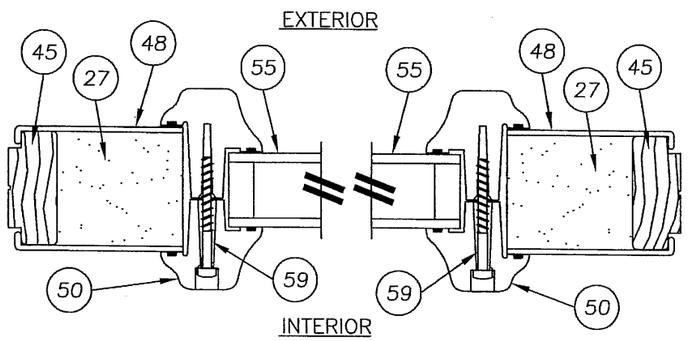

2/6 HORIZONTAL CROSS SECTION (FIBER CLASSIC)

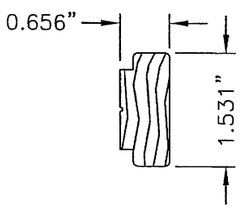

45 STILES & RAILS SIDELITE

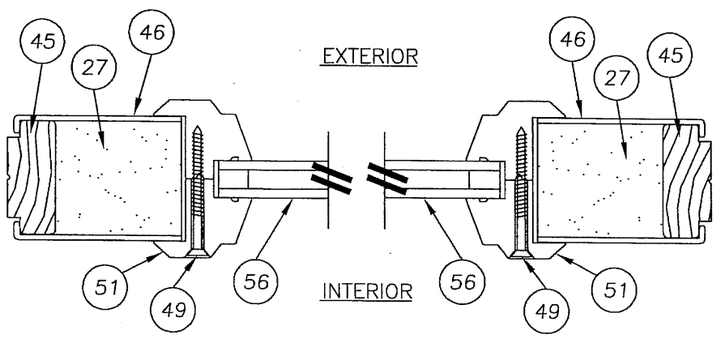

3/6 HORIZONTAL CROSS SECTION (SMOOTH STAR)

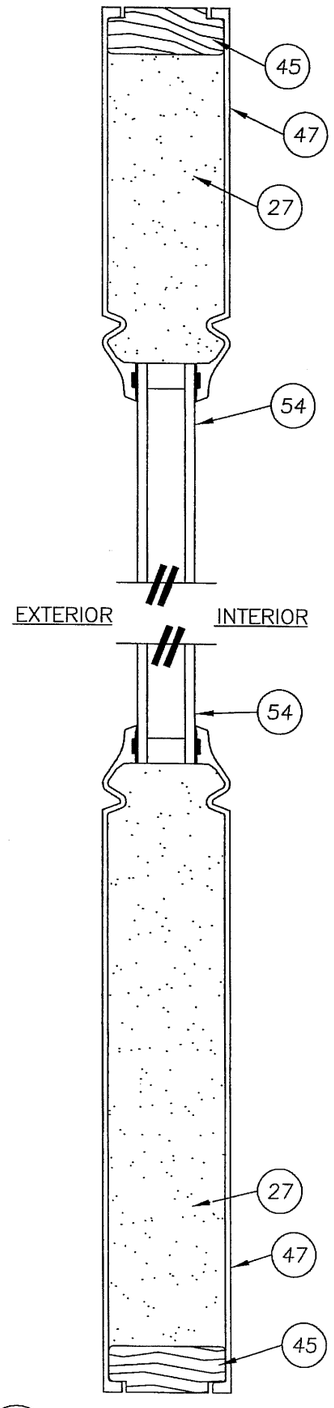

4/6 VERTICAL CROSS SECTION (CLASSIC CRAFT)

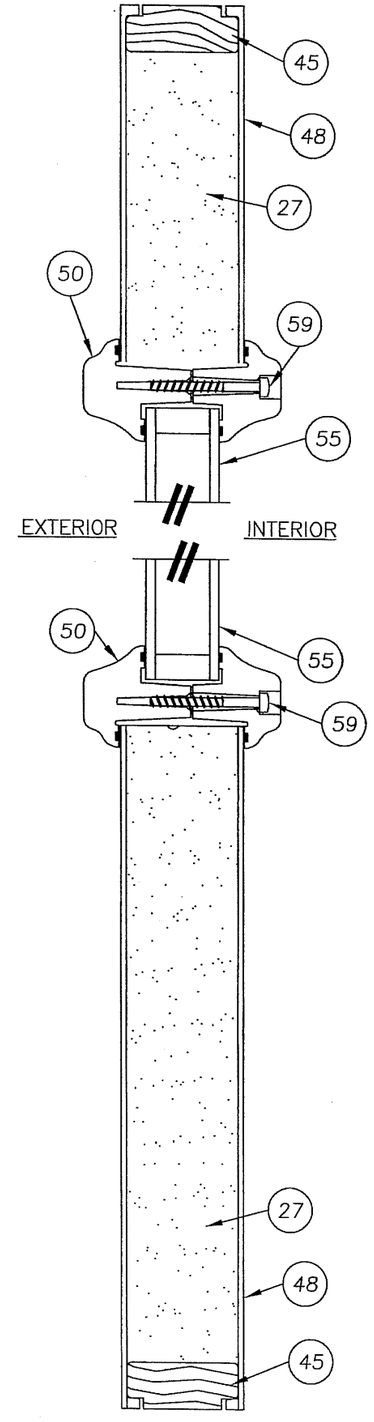

5/6 VERTICAL CROSS SECTION (FIBER CLASSIC)

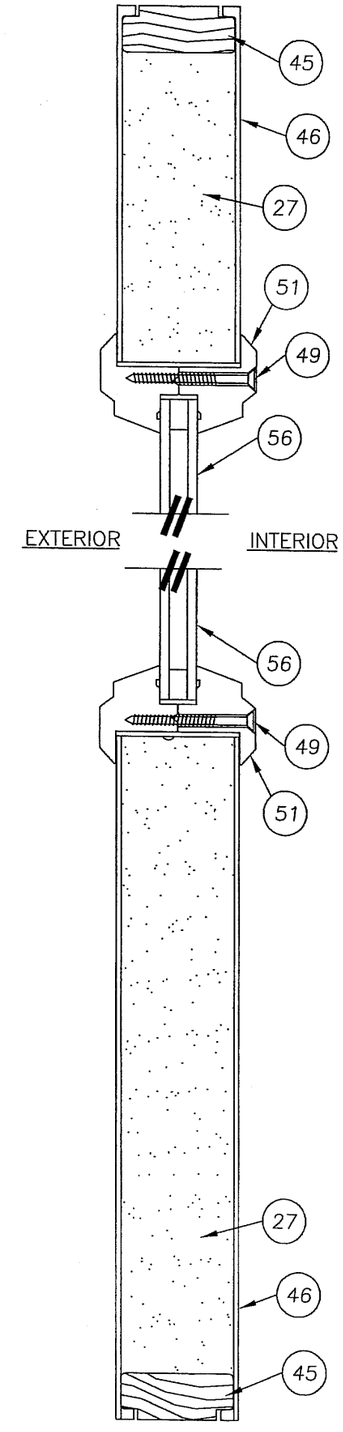

6/6 VERTICAL CROSS SECTION (SMOOTH STAR)

Documents Prepared By:
R.W. BUILDING CONSULTANTS, INC.
P.O. Box 230 Valrico FL. 33595
Phone No.: 813.659.9197
Florida Board of Professional Engineers
Certificate Of Authorization No. 9813
Wendell W. Harley, P.E. No. 54158
2-14-07

PRODUCT: DOUBLE OPAQUE FIBERGLASS DOOR W/SIDELITES "IMPACT" INSWING / OUTSWING

PART OR ASSEMBLY: SIDELITE PANEL DETAILS

NO.	DATE	REVISIONS	BY

DATE: 12/15/06
SCALE: N.T.S.
DWG. BY: AEM
CHK. BY: WWH
DRAWING NO.: TX-3170
SHEET 6 OF 13

© 2006 R.W. BUILDING CONSULTANTS INC.

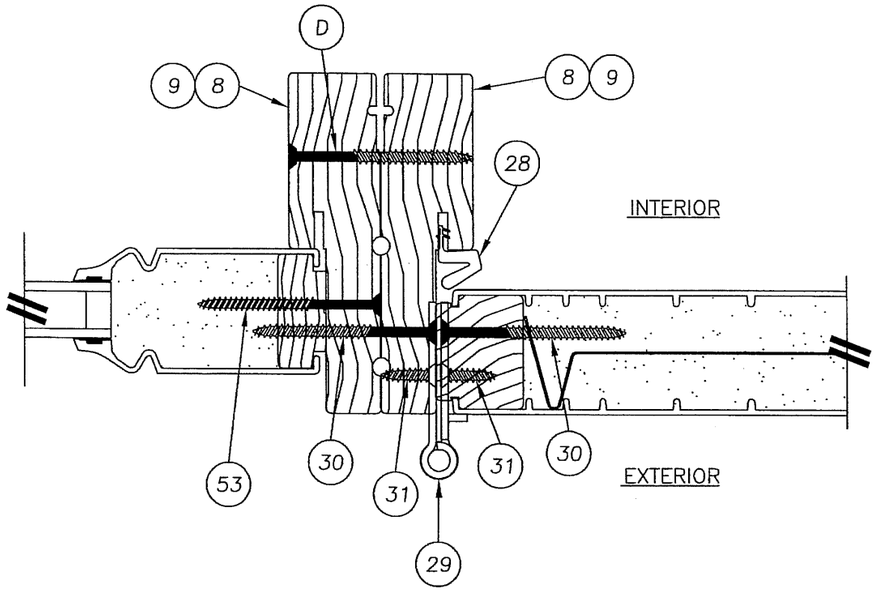

1/7 HORIZONTAL CROSS SECTION
@ HINGE
SMOOTH STAR PANEL SHOWN
SEE DOOR PANEL DETAILS FOR
OPTIONAL PANEL TYPES

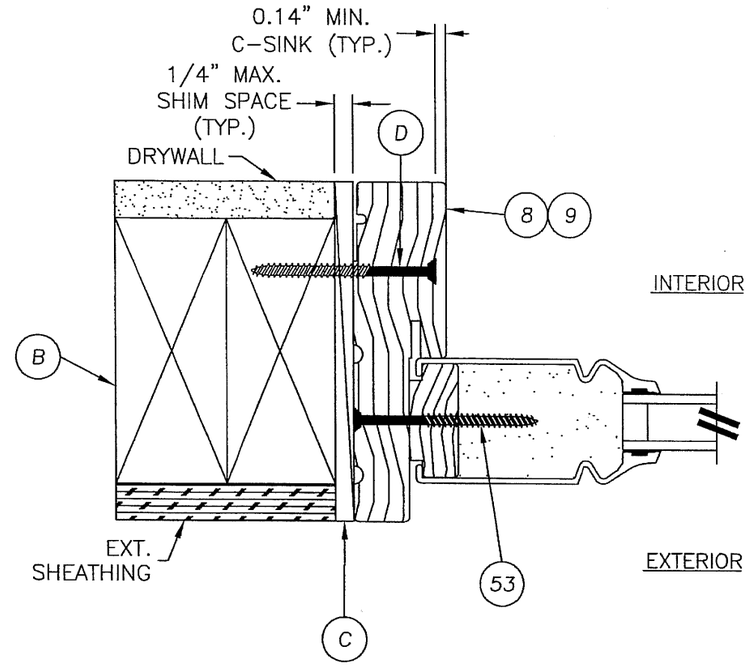

3/7 HORIZONTAL CROSS SECTION
@ SIDELITE
CLASSIC CRAFT PANEL SHOWN
SEE SIDELITE PANEL DETAILS FOR
OPTIONAL PANEL TYPES

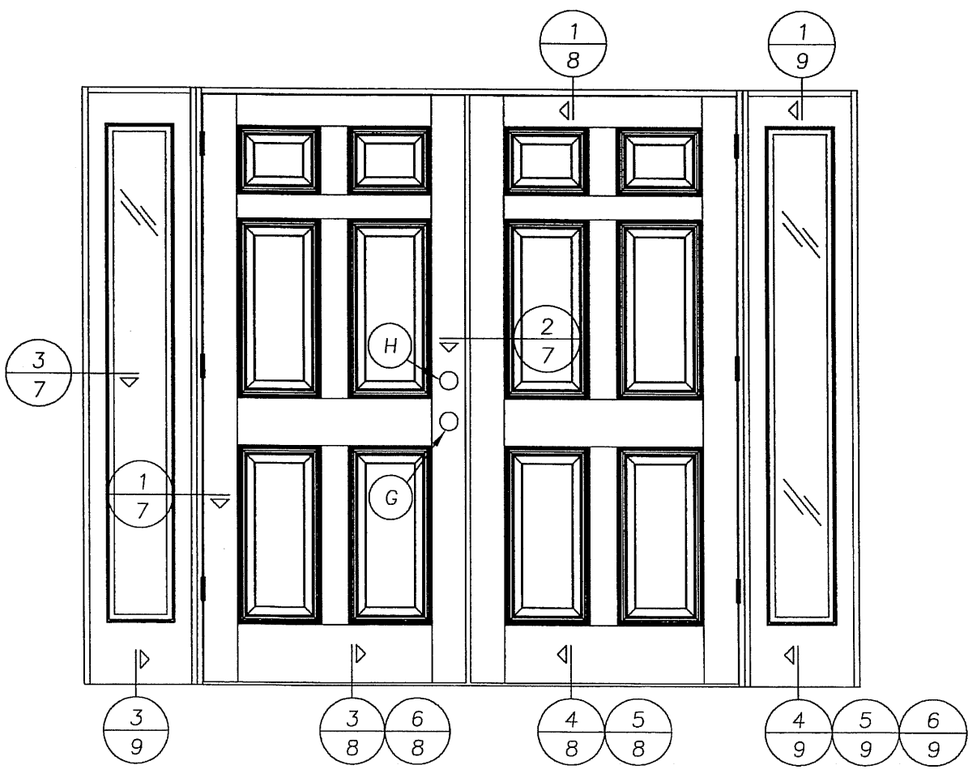

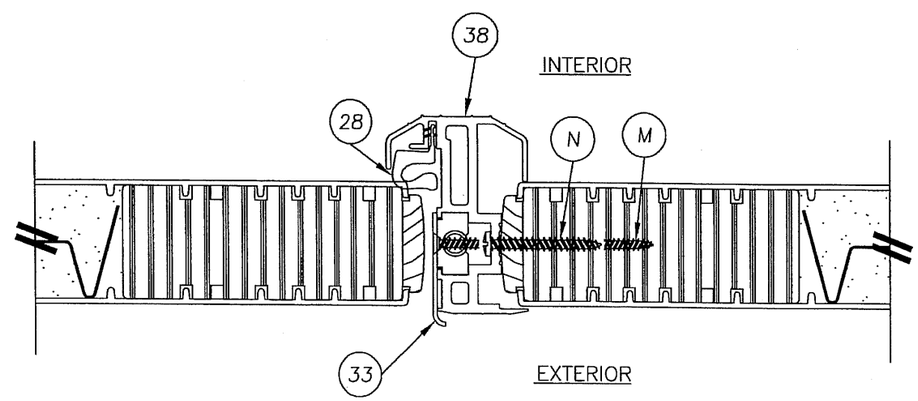

2/7 HORIZONTAL CROSS SECTION
@ ASTRAGAL
SMOOTH STAR PANEL SHOWN
SEE DOOR PANEL DETAILS FOR
OPTIONAL PANEL TYPES

Documents Prepared By:
R.W. BUILDING CONSULTANTS, INC.
P.O. Box 230 Valrico FL. 33595
Phone No.: 813.659.9197
Florida Board of Professional Engineers
Certificate Of Authorization No. 9813
Wendell W. Harley, P.E. No. 54158
2-14-07

PRODUCT: DOUBLE OPAQUE FIBERGLASS DOOR W/SIDELITES "IMPACT" INSWING / OUTSWING
PART OR ASSEMBLY: HORIZONTAL CROSS SECTIONS

NO.	DATE	REVISIONS	BY

DATE: 12/15/06
SCALE: N.T.S.
DWG. BY: AEM
CHK. BY: WWH
DRAWING NO.: TX-3170
SHEET 7 OF 13

© 2006 R.W. BUILDING CONSULTANTS INC.

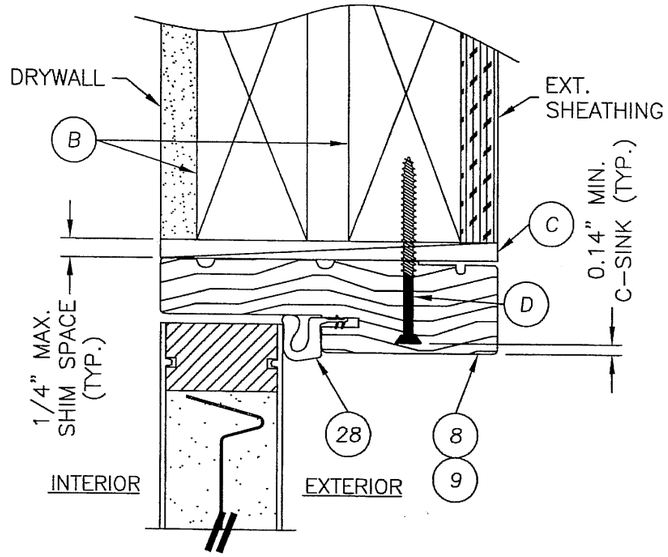

1/8 VERTICAL CROSS SECTION
@ HEAD
SMOOTH STAR PANEL SHOWN
SEE DOOR PANEL DETAILS FOR
OPTIONAL PANEL TYPES

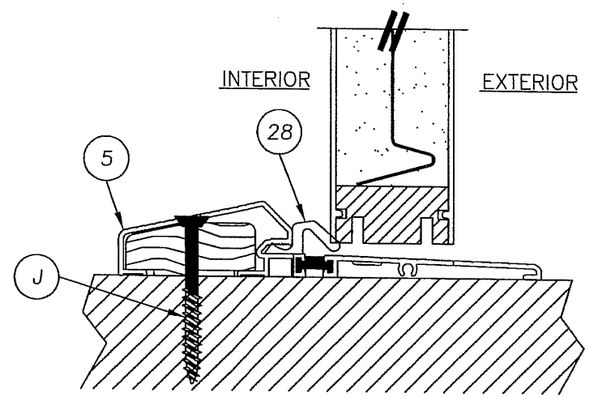

3/8 VERTICAL CROSS SECTION
@ THRESHOLD
SMOOTH STAR PANEL SHOWN
SEE DOOR PANEL DETAILS FOR
OPTIONAL PANEL TYPES

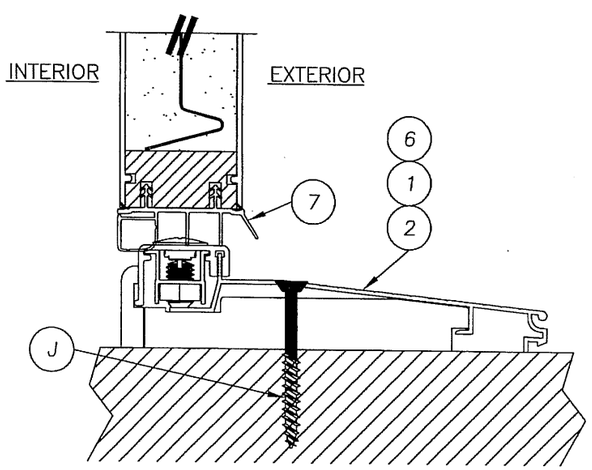

4/8 VERTICAL CROSS SECTION
@ THRESHOLD
SMOOTH STAR PANEL SHOWN
SEE DOOR PANEL DETAILS FOR
OPTIONAL PANEL TYPES

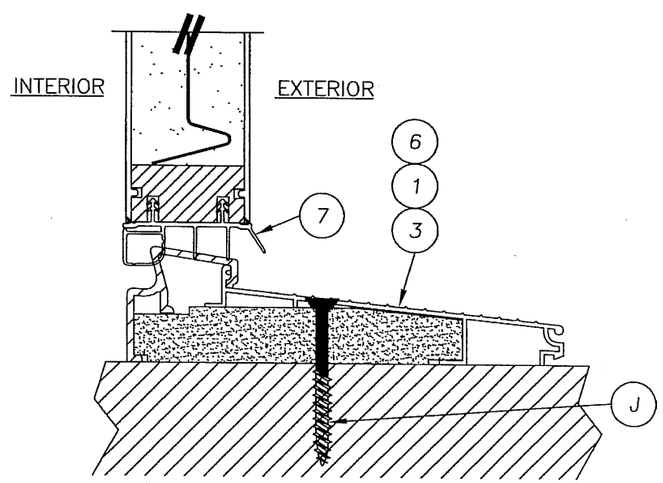

5/8 VERTICAL CROSS SECTION
@ THRESHOLD
SMOOTH STAR PANEL SHOWN
SEE DOOR PANEL DETAILS FOR
OPTIONAL PANEL TYPES

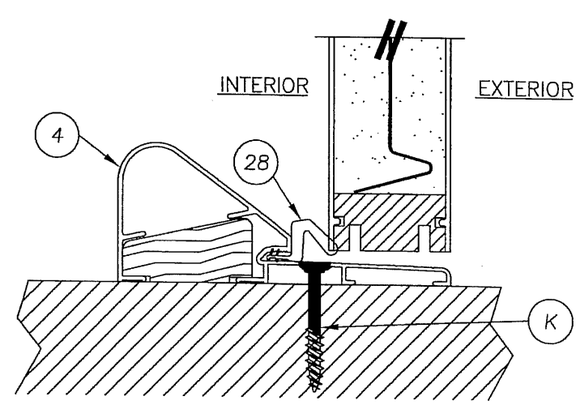

6/8 VERTICAL CROSS SECTION
@ THRESHOLD
SMOOTH STAR PANEL SHOWN
SEE DOOR PANEL DETAILS FOR
OPTIONAL PANEL TYPES

Documents Prepared By:
RW BUILDING CONSULTANTS, INC.
P.O. Box 230 Valrico FL. 33595
Phone No.: 813.659.9197
Florida Board of Professional Engineers
Certificate Of Authorization No. 9813
Wendell W. Horney, P.E. No. 54158

PRODUCT: DOUBLE OPAQUE FIBERGLASS DOOR W/SIDELITES "IMPACT" INSWING / OUTSWING

PART OR ASSEMBLY: VERTICAL CROSS SECTIONS

NO.	DATE	REVISIONS	BY

DATE: 12/15/06
SCALE: N.T.S.
DWG. BY: AEM
CHK. BY: WWH
DRAWING NO.: TX-3170
SHEET 8 OF 13

© 2006 R.W. BUILDING CONSULTANTS INC.

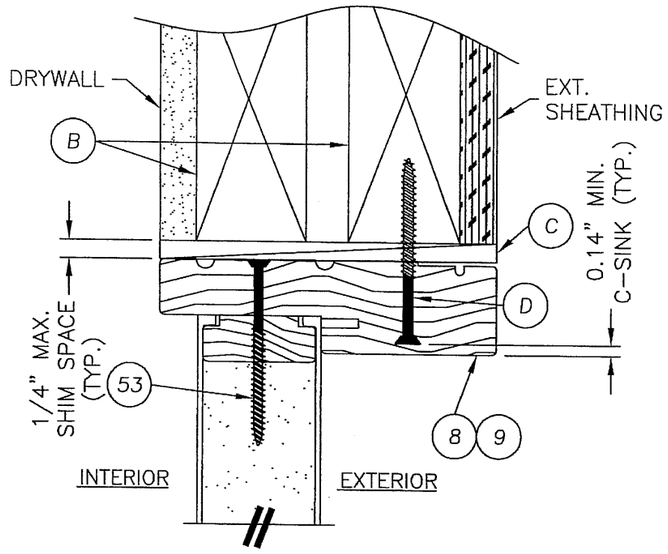

1/9 VERTICAL CROSS SECTION

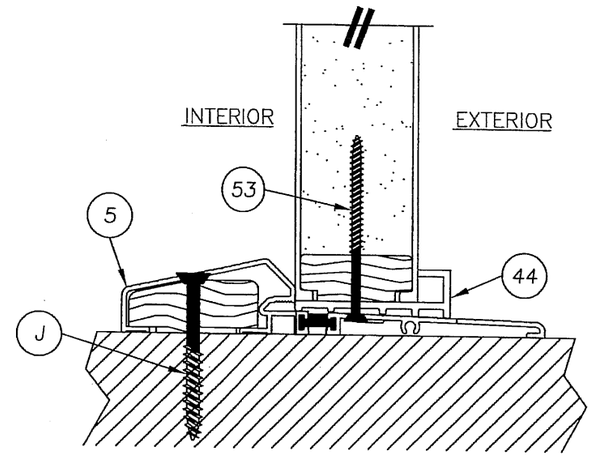

3/9 VERTICAL CROSS SECTION

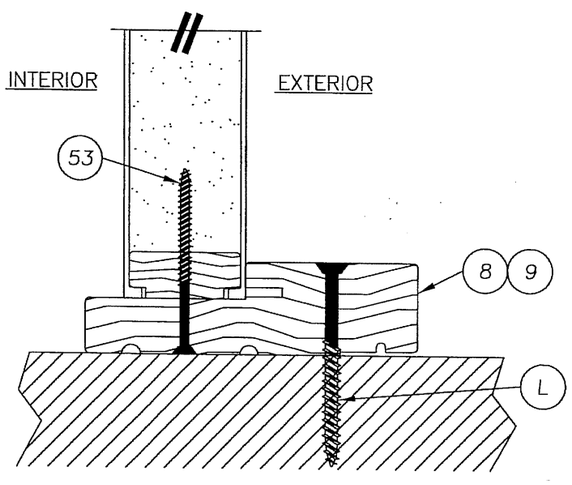

4/9 VERTICAL CROSS SECTION

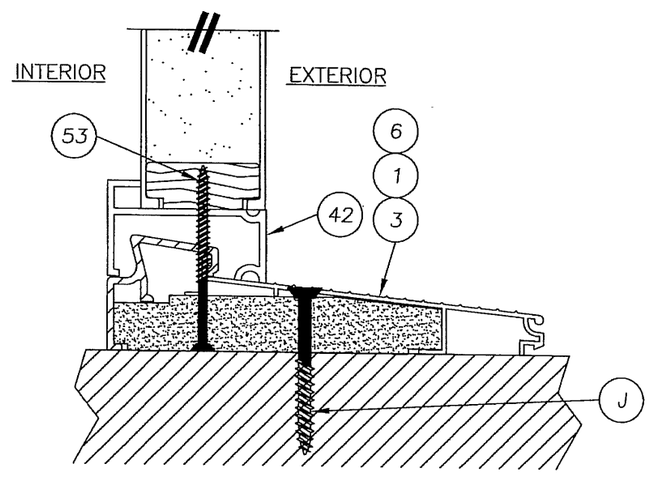

5/9 VERTICAL CROSS SECTION

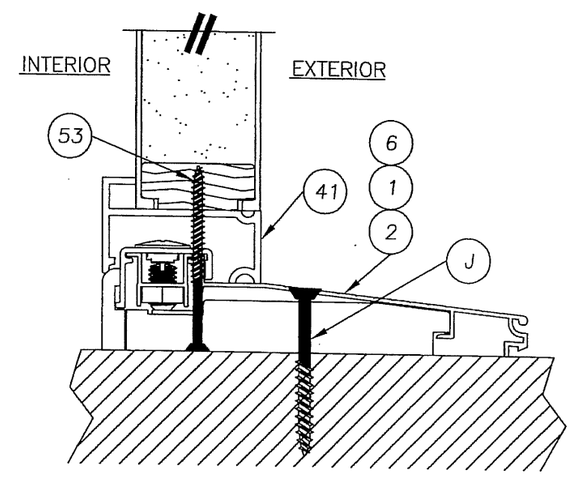

6/9 VERTICAL CROSS SECTION

Documents Prepared By:

R.W. BUILDING CONSULTANTS, INC.
P.O. Box 230 Valrico FL. 33595
Phone No.: 813.659.9197
Florida Board of Professional Engineers
Certificate Of Authorization No. 9813
Wendell W. Hand, P.E. No. 54158

PRODUCT: DOUBLE OPAQUE FIBERGLASS DOOR W/SIDELITES "IMPACT" INSWING / OUTSWING

PART OR ASSEMBLY: VERTICAL CROSS SECTIONS

NO.	DATE	BY

REVISIONS

DATE: 12/15/06
SCALE: N.T.S.
DWG. BY: AEM
CHK. BY: WWH
DRAWING NO.: TX-3170
SHEET 9 OF 13

© 2006 R.W. BUILDING CONSULTANTS INC.

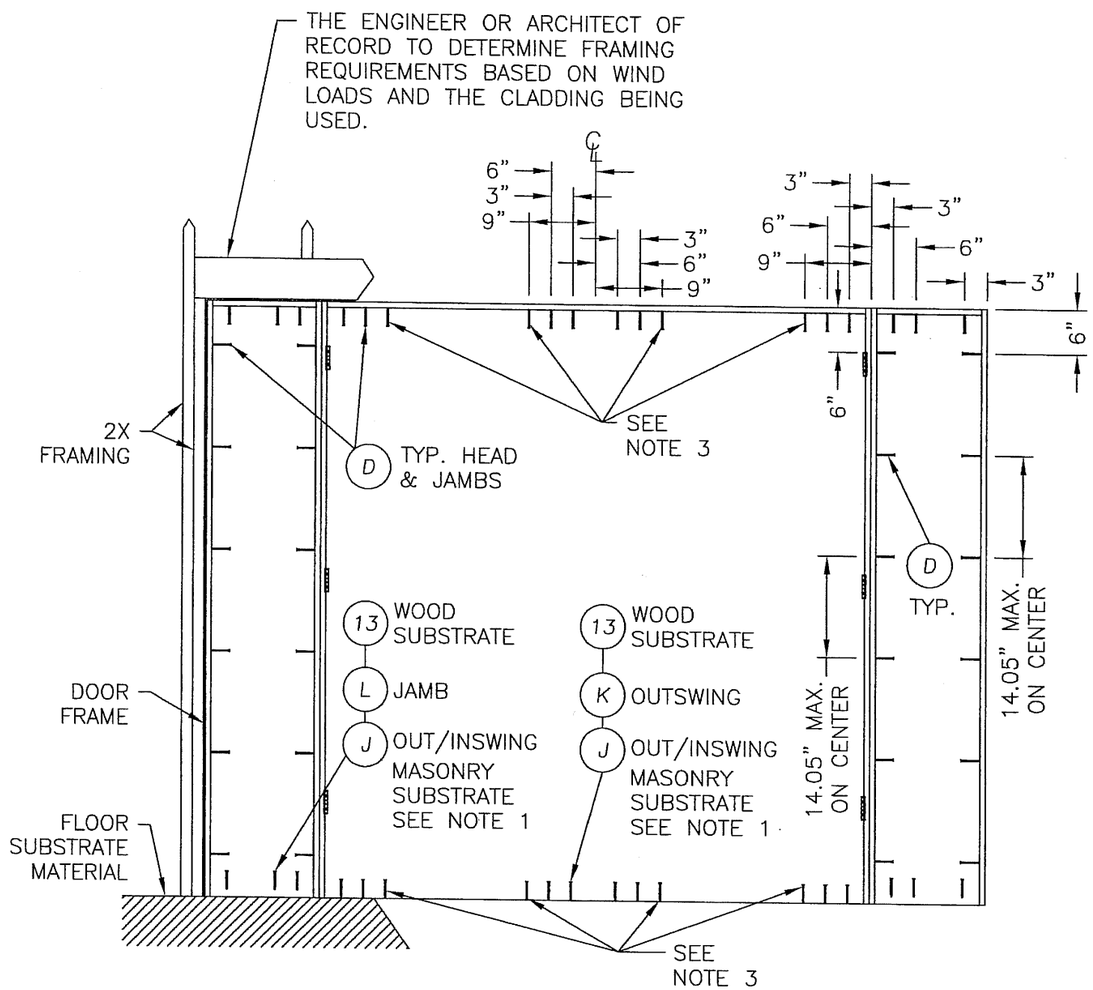

FRAME ANCHORING

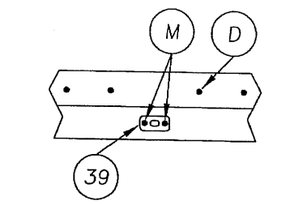

ASTRAGAL STRIKE PLATE @ HEAD

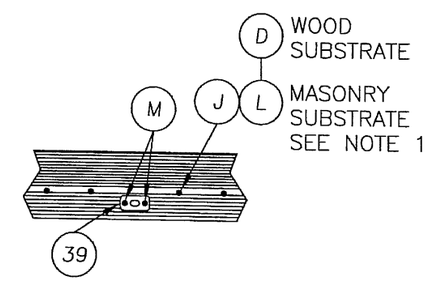

ASTRAGAL STRIKE PLATE @ THRESHOLD

NOTES:

1. 1/4" ITW CONCRETE SCREWS ANCHORING FRAME AND/OR SILL REQUIRE A MINIMUM 2-1/2" CLEARANCE TO MASONRY EDGES AND A MINIMUM 3" CLEARANCE TO ADJACENT CONCRETE SCREWS UNLESS OTHERWISE NOTED BY CONCRETE SCREW MANUFACTURER.

3. THESE SCREWS ARE REQUIRED ONLY WHEN THE DP EXCEEDS 47 PSF.

Documents Prepared By:
R W BUILDING CONSULTANTS, INC.
P.O. Box 230 Valrico FL. 33595
Phone No.: 813.659.9197
Florida Board of Professional Engineers
Certificate Of Authorization No. 9813
Wendell W. Honey P.E. No. 54158
2-14-07

PRODUCT: DOUBLE OPAQUE FIBERGLASS DOOR W/SIDELITES "IMPACT" INSWING / OUTSWING

PART OR ASSEMBLY: FRAME ANCHORING

NO.	DATE	REVISIONS	BY

DATE: 12/15/06
SCALE: N.T.S.
DWG. BY: AEM
CHK. BY: WWH
DRAWING NO.: TX-3170
SHEET 10 OF 13

© 2006 R.W. BUILDING CONSULTANTS INC.

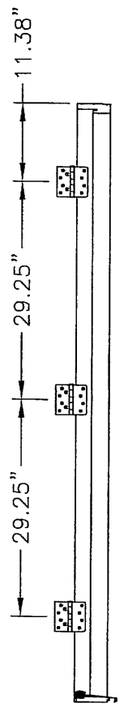

HINGE DETAIL

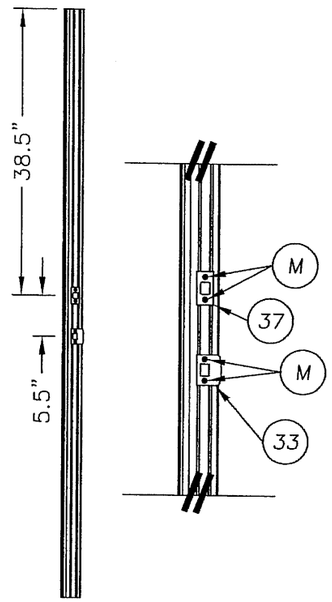

STRIKE PLATE DETAIL
DOUBLE DOOR

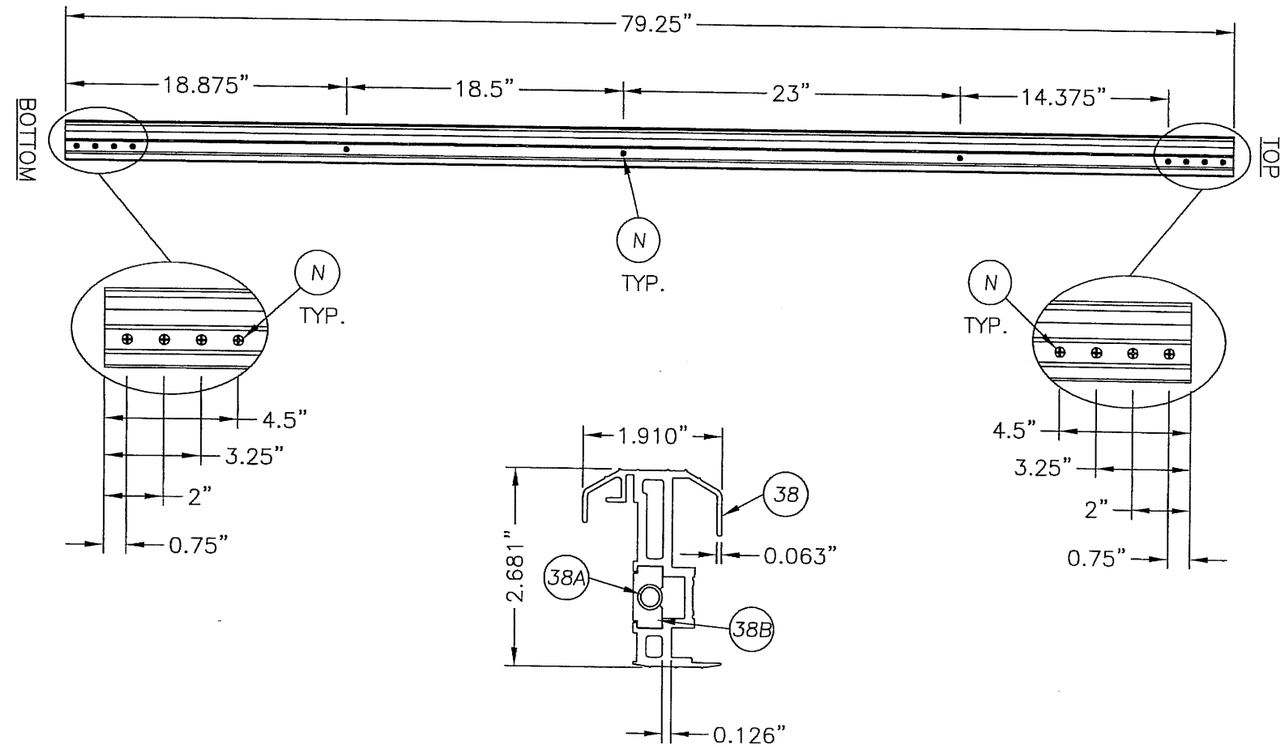

38 ASTRAGAL DETAIL

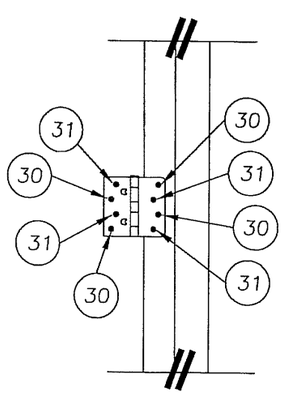

HINGE DETAIL

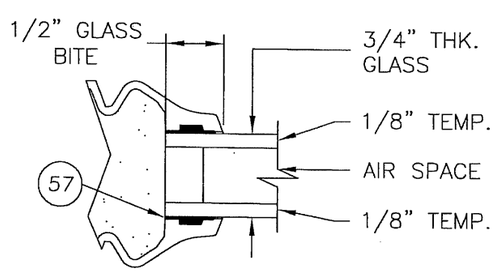

54 GLAZING DETAIL
3/4" INSULATED GLASS

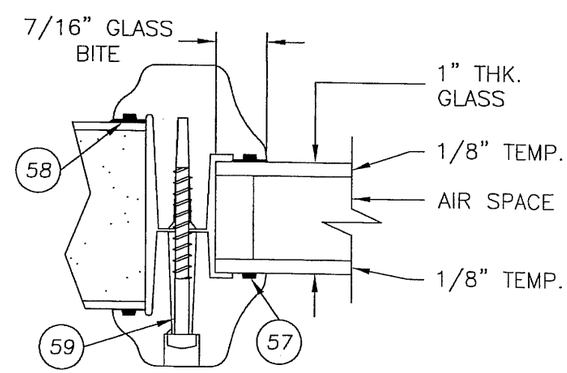

55 GLAZING DETAIL
1" INSULATED GLASS

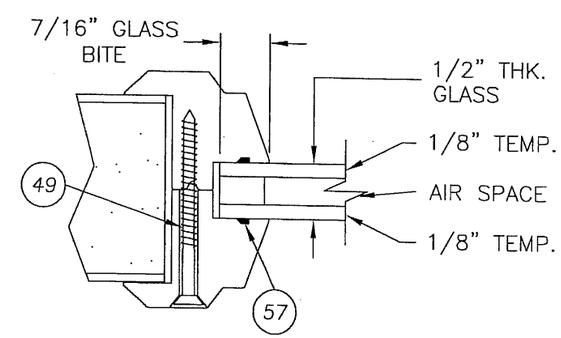

56 GLAZING DETAIL
1/2" INSULATED GLASS

Documents Prepared By:
R.W. BUILDING CONSULTANTS, INC.
P.O. Box 230 Valrico FL. 33595
Phone No.: 813.659.9197
Florida Board of Professional Engineers
Certificate Of Authorization No. 9813
Wendell W. Hanex P.E. No. 54158
2-14-07

PRODUCT: DOUBLE OPAQUE FIBERGLASS DOOR W/SIDELITES "IMPACT" INSWING / OUTSWING

PART OR ASSEMBLY: ASTRAGAL DETAILS, ANCHORING DETAILS & GLAZING DETAILS

NO.	DATE	REVISIONS	BY

DATE: 12/15/06
SCALE: N.T.S.
DWG. BY: AEM
CHK. BY: WWH
DRAWING NO.: TX-3170
SHEET 11 OF 13

© 2006 R.W. BUILDING CONSULTANTS INC.

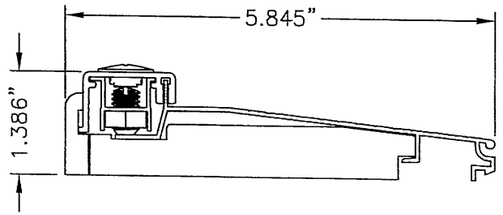

2 THRESHOLD
INSWING ADJUSTABLE

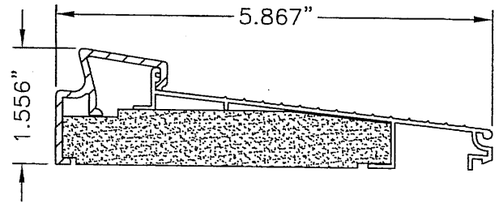

3 THRESHOLD
INSWING SELF–ADJUST

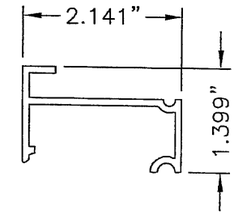

41 INSWING SIDELITE
SPACER

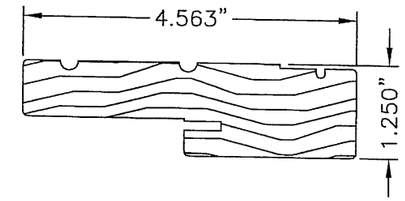

9 8 JAMB

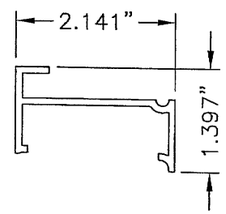

40 INSWING SIDELITE
SPACER

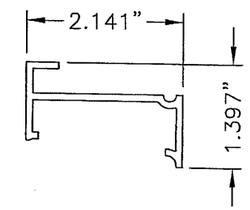

43 INSWING SIDELITE
SPACER

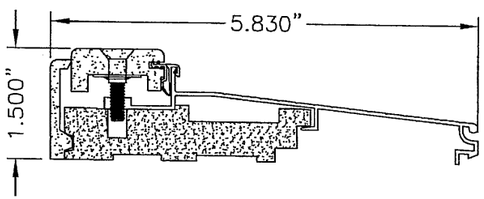

6 THRESHOLD
INSWING
MAX. DP RATING = +/– 50.0 PSF

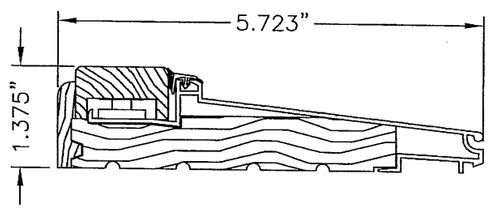

1 THRESHOLD
INSWING ADJUSTABLE

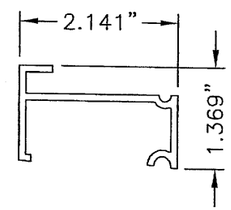

42 INSWING SIDELITE
SPACER

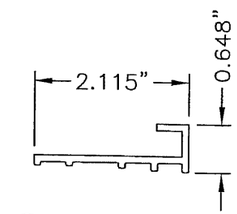

44 OUTSWING SIDELITE
SPACER

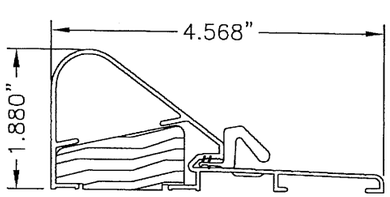

4 THRESHOLD
OUTSWING COASTAL

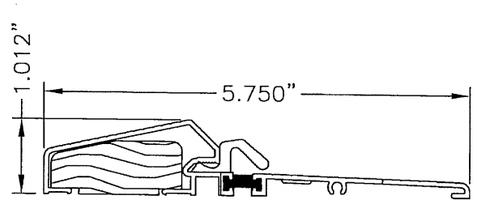

5 THRESHOLD
OUTSWING STANDARD

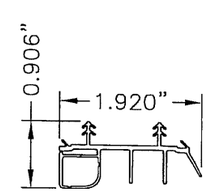

7 SWEEP

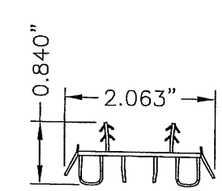

52 SWEEP

Documents Prepared By:
RW BUILDING CONSULTANTS, INC.
P.O. Box 230 Valrico FL. 33595
Phone No.: 813.659.9197
Florida Board of Professional Engineers
Certificate Of Authorization No. 9813
Wendell W. Haney, P.E. No. 54158
2-14-07

PRODUCT:
DOUBLE OPAQUE
FIBERGLASS DOOR W/SIDELITES
"IMPACT" INSWING / OUTSWING

PART OR ASSEMBLY:
COMPONENTS

NO.	DATE	REVISIONS	BY

DATE: 12/15/06
SCALE: N.T.S.
DWG. BY: AEM
CHK. BY: WWH
DRAWING NO.: TX–3170
SHEET 12 OF 13

© 2006 R.W. BUILDING CONSULTANTS INC.

BILL OF MATERIALS

ITEM	DESCRIPTION	MATERIAL
B	2X FRAMING	WOOD
C	1/4" MAX. SHIM SPACE	WOOD
D	#10 X 2-1/2" PFH WOOD SCREW	STEEL
G	KWIKSET 200 SERIES PASSAGE LOCK	STEEL
H	KWIKSET 600 SERIES DEADBOLT	STEEL
I	1/4" X 3-3/4" ITW TAPCON	STEEL
J	1/4" X 2-1/4" ITW TAPCON	STEEL
K	1/4" X 1-3/4" ITW TAPCON	STEEL
L	1/4" X 2-3/4" ITW TAPCON	STEEL
M	#8 X 3" PFH SCREW (STRIKE PLATES @ HEAD & SILL)	STEEL
N	#10 X 1-1/2" PPH SCREW ASTRAGAL TO PANEL	STEEL
1	INSWING ADJUSTABLE THRESHOLD (IS300AJ)	ALUM./WOOD
2	INSWING THRESHOLD (IS300HP5)	–
3	INSWING SELF ADJUST THERMAL BREAK THRESHOLD (ISP30M)	ALUM./COMP.
4	OUTSWING COASTAL THRESHOLD	ALUM./WOOD
5	OUTSWING STANDARD THRESHOLD	ALUM./WOOD
6	INSWING THRESHOLD	–
7	DOOR BOTTOM SWEEP	VINYL
8	JAMB (PINE)	WOOD
9	JAMB (OAK)	WOOD
10	HINGE STILE (SMOOTH STAR)	WOOD
11	LOCK STILE (SMOOTH STAR)	LVL/WOOD
12	TOP RAIL (SMOOTH STAR)	PVC
13	BOTTOM RAIL (SMOOTH STAR)	PVC
14	PANEL REINFORCEMENT 0.023" THK. (SMOOTH STAR)	STEEL
15	DOOR SKIN 0.072" THK. (SMOOTH STAR) Fy = 6,000 PSI MIN.	FIBERGLASS
16	HINGE STILE (CLASSIC CRAFT)	WOOD/LVL
17	LOCK STILE (CLASSIC CRAFT)	WOOD/LVL
18	TOP RAIL (CLASSIC CRAFT)	PVC
19	BOTTOM RAIL (CLASSIC CRAFT)	PVC
20	PANEL REINFORCEMENT 0.023" THK. (CLASSIC CRAFT)	STEEL
21	DOOR SKIN 0.090" THK. (CLASSIC CRAFT) Fy = 6,000 PSI MIN.	FIBERGLASS
22	LOCK & HINGE STILE (CLASSIC CRAFT RUSTIC)	WOOD/LVL
23	TOP RAIL (CLASSIC CRAFT RUSTIC)	WOOD
24	BOTTOM RAIL (CLASSIC CRAFT RUSTIC)	PVC
25	PANEL REINFORCEMENT 0.023" THK. (CLASSIC CRAFT RUSTIC)	STEEL
26	DOOR SKIN 0.090" THK. (CC RUSTIC) Fy = 6,000 PSI MIN.	FIBERGLASS
27	FOAM CORE	POLYURETHANE
28	WEATHERSTRIP	FOAM
29	HINGE	STEEL
30	#10 X 2-1/2" PFH SCREW	STEEL
31	#10 X 3/4" PFH SCREW	STEEL
32	#9 X 3" PFH WOOD SCREW	STEEL
33	LATCH STRIKE PLATE	STEEL

BILL OF MATERIALS

ITEM	DESCRIPTION	MATERIAL
37	DEADBOLT STRIKE PLATE	STEEL
38	ASTRAGAL	ALUMINUM
38A	ASTRAGAL FLUSH BOLT	STEEL
38B	ASTRAGAL FLUSH BOLT RETAINER	ALUMINUM
39	ASTRAGAL STRIKE PLATE @ HEAD & THRESHOLD	STEEL
40	INSWING SIDELITE SPACER FOR ADJUSTABLE THRESHOLD (DB14AJA)	PVC
41	INSWING SIDELITE SPACER FOR HP THRESHOLD (DB14HPA)	PVC
42	INSWING SIDELITE SPACER FOR SELF ADJUST THRESHOLD (DB14)	PVC
43	INSWING SIDELITE SPACER	PVC
44	OUTSWING SIDELITE SPACER	PVC
45	SIDELITE STILES & RAILS	WOOD
46	SIDELITE SKIN 0.070" THK. (SMOOTH STAR)	FIBERGLASS
47	SIDELITE SKIN 0.090" THK. (CLASSIC CRAFT)	FIBERGLASS
48	SIDELITE SKIN 0.070" THK. (FIBER CLASSIC)	FIBERGLASS
49	#6 X 1-3/4" PFH SCREW (LITE FRAME)	STEEL
50	LITE FRAME FIBER CLASSIC	PVC
51	LITE FRAME SMOOTH STAR	PVC
52	DOOR BOTTOM SWEEP	VINYL
53	#9 X 2-1/2" PFH WOOD SCREW	STEEL
54	3/4" INSULATED GLASS 1/8" TEMPERED – AIR – 1/8" TEMPERED	GLASS
55	1" INSULATED GLASS 1/8" TEMPERED – AIR – 1/8" TEMPERED	GLASS
56	1/2" INSULATED GLASS 1/8" TEMPERED – AIR – 1/8" TEMPERED	GLASS
57	GLAZING COMPOUND	SILICONE
58	SEALANT	SILICONE
59	#9 X 1" PPH SCREW (LITE FRAME)	STEEL
60	HINGE STILE (FIBER CLASSIC)	WOOD
61	LOCK STILE (FIBER CLASSIC)	LVL/WOOD
62	TOP RAIL (FIBER CLASSIC)	PVC
63	BOTTOM RAIL (FIBER CLASSIC)	PVC
64	PANEL REINFORCEMENT 0.023" THK. (FIBER CLASSIC)	STEEL
65	DOOR SKIN 0.072" THK. (FIBER CLASSIC) Fy = 6,000 PSI MIN.	FIBERGLASS

Documents Prepared By:
RW BUILDING CONSULTANTS, INC.
P.O. Box 230 Valrico FL. 33595
Phone No.: 813.659.9197
Florida Board of Professional Engineers
Certificate Of Authorization No. 9813
Wendell W. Haney, P.E. No. 54158

12-14-07

PRODUCT: DOUBLE OPAQUE FIBERGLASS DOOR W/SIDELITES "IMPACT" INSWING / OUTSWING

PART OR ASSEMBLY: BILL OF MATERIALS

NO.	DATE	REVISIONS	BY

DATE: 12/15/06
SCALE: N.T.S.
DWG. BY: AEM
CHK. BY: WWH
DRAWING NO.: TX-3170
SHEET 13 OF 13

© 2006 R.W. BUILDING CONSULTANTS INC.